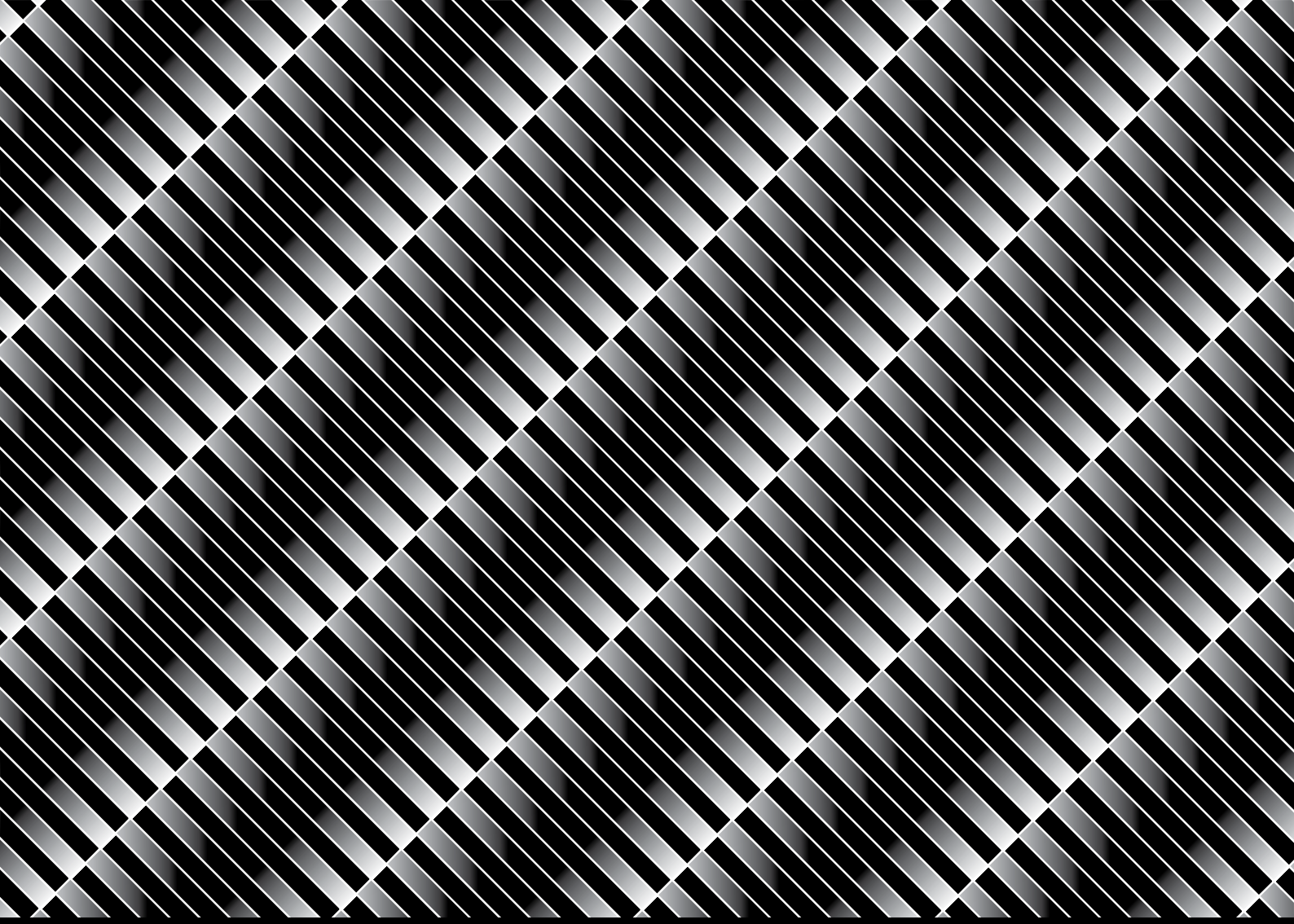

AG neovo

THE DISPLAY CHOICE
OF PROFESSIONALS™

LA-2402 LCD Monitor

User Manual

www.agneovo.com

TABLE OF CONTENTS

SAFETY INFORMATION

Federal Communications Commission (FCC) Notice (U.S. Only) 3
WEEE 4

PRECAUTIONS

Notice 5
Cautions When Setting Up 5
Cautions When Using 6
Cleaning and Maintenance 7
Notice for the LCD Display 7

CHAPTER 1: PRODUCT DESCRIPTION

1.1 Package Contents 8
1.2 Installation 9
1.2.1 Installing the Stand 9
1.2.2 Adjusting the Tilt 9
1.2.3 Wall Mounting 10
1.3 Overview 11
1.3.1 Front View 11
1.3.3 Rear Vie4 12

CHAPTER 2: MAKING CONNECTIONS

2.1 Connecting the AC Power 13
2.2 Connecting Input Source Signals 13

CHAPTER 3: ON SCREEN DISPLAY MENU

3.1 OSD Menu Tree 14

CHAPTER 4: ADJUSTING THE LCD DISPLAY

4.1 Colour Setting 17
4.2 Picture Setting 18
4.3 OSD Setting 19
4.4 Other Setting 20
4.5 Reset Setting 21

CHAPTER 5: APPENDIX

5.1 Warning Messages 22
5.2 Troubleshooting 23

CHAPTER 6: SPECIFICATIONS

6.1 Display Specifications 24
6.2 Display Dimensions 25

SAFETY INFORMATION

Federal Communications Commission (FCC) Notice (U.S. Only)

This equipment has been tested and found to comply with the limits for a Class B digital device, pursuant to part 15 of the FCC Rules. These limits are designed to provide reasonable protection against harmful interference in a residential installation. This equipment generates, uses and can radiate radio frequency energy and, if not installed and used in accordance with the instructions, may cause harmful interference to radio communications. However, there is no guarantee that interference will not occur in a particular installation. If this equipment does cause harmful interference to radio or television reception, which can be determined by turning the equipment off and on, the user is encouraged to try to correct the interference by one or more of the following measures:

- Reorient or relocate the receiving antenna.
- Increase the separation between the equipment and receiver.
- Connect the equipment into an outlet on a circuit different from that to which the receiver is connected.
- Consult the dealer or an experienced radio/TV technician for help.

Changes or modifications not expressly approved by the party responsible for compliance could void the user's authority to operate the equipment.

Use only an RF shielded cable that was supplied with the display when connecting this display to a computer device.

To prevent damage which may result in fire or shock hazard, do not expose this appliance to rain or excessive moisture.

THIS CLASS B DIGITAL APPARATUS MEETS ALL REQUIREMENTS OF THE CANADIAN INTERFERENCE-CAUSING EQUIPMENT REGULATIONS.

This device complies with Part 15 of the FCC Rules. Operation is subject to the following two conditions: (1) this device may not cause harmful interference, and (2) this device must accept any interference received, including interference that may cause undesired operation.

SAFETY INFORMATION

WEEE

Disposal of Waste Equipment by Users in Private Household in the European Union.

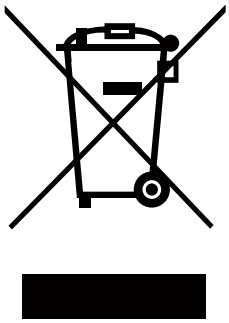

This symbol on the product or on its packaging indicates that this product must not be disposed of with your other household waste. Instead, it is your responsibility to dispose of your waste equipment by handing it over to a designated collection point for the recycling of waste electrical and electronic equipment. The separate collection and recycling of your waste equipment at the time of disposal will help to conserve natural resources and ensure that it is recycled in a manner that protects human health and the environment. For more information about where you can drop off your waste equipment for recycling, please contact your local city office, your household waste disposal service or the shop where you purchased the product

For Private Households in the European Union.To help conserve natural resources and ensure the product is recycled in a manner that protects human health and the environment, we would like to bring your attention to the following:

- The crossed-out dustbin on the device or outer packaging indicates the product is compliant with European WEEE (Waste Electrical and Electronic Equipment) Directive
- Always dispose of the old devices separately from household waste
- Batteries should be removed beforehand and disposed separately to the right collection system
- You are responsible with regard to the deletion of personal data on old devices before disposal
- Private households can hand in their old devices free of charge
- For more information about where you can drop off your waste equipment for recycling, please contact your local city office, your household waste disposal service or the shop where you purchased the product

PRECAUTIONS

PRECAUTIONS

CAUTION

RISK OF ELECTRIC SHOCK
DO NOT OPEN

Symbols used in this manual

	This icon indicates the existence of a potential hazard that could result in personal injury or damage to the product.
	This icon indicates important operating and servicing information.

Notice

- Read this User Manual carefully before using the LCD display and keep it for future reference.
- The product specifications and other information provided in this User Manual are for reference only. All information is subject to change without notice. Updated content can be downloaded from our web site at www.agneovo.com.
- To protect your rights as a consumer, do not remove any stickers from the LCD display. Doing so may affect the determination of the warranty period.

Cautions When Setting Up

	Do not place the LCD display near heat sources, such as a heater, exhaust vent, or in direct sunlight.
	Do not cover or block the ventilation holes in the housing.
	Place the LCD display on a stable area. Do not place the LCD display where it may subject to vibration or shock.
	Place the LCD display in a well-ventilated area.
	Do not place the LCD display outdoors.
	Do not place the LCD display in a dusty or humid environment.
	Do not spill liquid or insert sharp objects into the LCD display through the ventilation holes. Doing so may cause accidental fire, electric shock or damage the LCD display.

PRECAUTIONS

Cautions When Using

	Use only the power cord supplied with the LCD display.
	The power outlet should be installed near the LCD display and be easily accessible.
	If an extension cord is used with the LCD display, ensure that the total current consumption plugged into the power outlet does not exceed the ampere rating.
	Do not allow anything to rest on the power cord. Do not place the LCD display where the power cord may be stepped on.
	If the LCD display will not be used for an indefinite period of time, unplug the power cord from the power outlet.
	To disconnect the power cord, grasp and pull by the plug head. Do not tug on the cord; doing so may cause fire or electric shock.
	Do not unplug or touch the power cord with wet hands.

WARNING:

Unplug the power cord from the power outlet and refer to qualified service personnel under the following conditions:

- When the power cord is damaged.
- If the LCD display has been dropped or the housing has been damaged.
- If the LCD display emits smoke or a distinct odor.

	Ceiling mount or mount on any other horizontal surface overhead are not advisable.

WARNING:

Installation in contravention of the instructions may result in undesirable consequences, particularly hurting people and damaging property. Users who have already mounted the display on the ceiling or any other horizontal surface overhead are strongly advised to contact AG Neovo for consultations and solutions to help ensure a most pleasurable and fulfilling display experience.

PRECAUTIONS

Cleaning and Maintenance

Do not attempt to service the LCD display yourself, refer to qualified service personnel.

Opening or removing the covers may expose you to dangerous voltage or other risks.

Notice for the LCD Display

In order to maintain the stable luminous performance, it is recommended to use low brightness setting.

Due to the lifespan of the lamp, it is normal that the brightness quality of the LCD display may decrease with time.

When static images are displayed for long periods of time, the image may cause an imprint on the LCD display. This is called image retention or burn-in.

To prevent image retention, do any of the following:

- Set the LCD display to turn off after a few minutes of being idle.
- Use a screen saver that has moving graphics or a blank white image.
- Switch desktop backgrounds regularly.
- Adjust the LCD display to low brightness settings.
- Turn off the LCD display when the system is not in use.

Things to do when the LCD display shows image retention:

- Turn off the LCD display for extended periods of time. It can be several hours or several days.
- Use a screen saver and run it for extended periods of time.
- Use a black and white image and run it for extended periods of time.

There are millions of micro transistors inside the LCD display. It is normal for a few transistors to be damaged and to produce spots. This is acceptable and is not considered a failure.

CHAPTER 1: PRODUCT DESCRIPTION

1.1 Package Contents

When unpacking, check if the following items are included in the package. If any of them is missing or damaged, contact your dealer.

☐ **LCD Display**

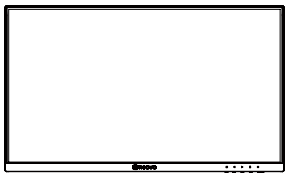

☐ **Base**

☐ **Stand**

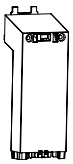

☐ **Handle**

☐ **Quick Start Guide**

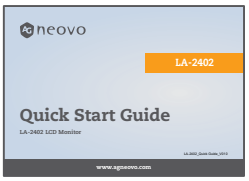

☐ **Warranty Card**

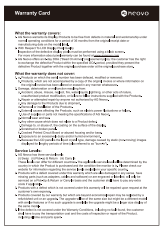

☐ **Power Cord**

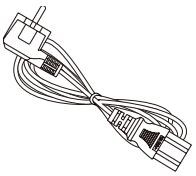

☐ **HDMI Cable**

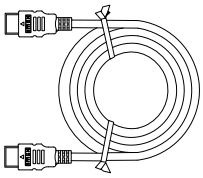

Note:

- *Use only the supplied power cord.*
- *The above pictures are for reference only. Actual items may vary upon shipment.*

1.2 Installation

1.2.1 Installing the Stand

1. **Place the LCD display with the screen side down on a cushioned surface.**
2. **Attach the stand to the LCD display.**

   a. Press firmly on the base to secure the latches on the base into the slots on the stand.

   b. Attach the stand to the base mount.

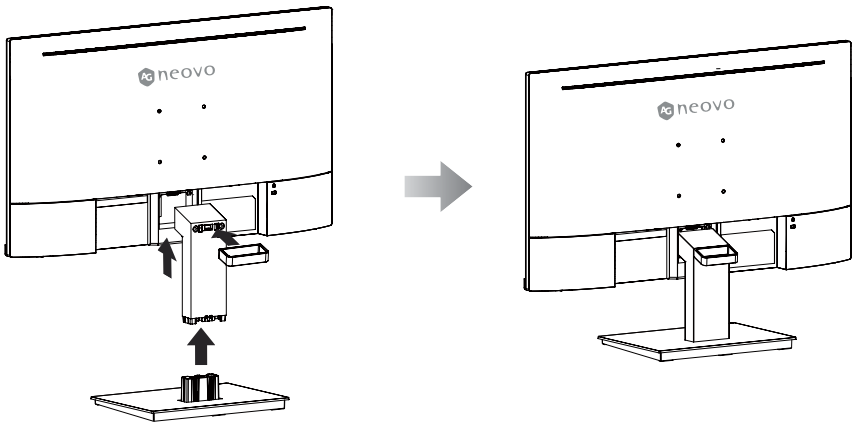

1.2.2 Adjusting the Tilt

The screen can be adjusted by inclining forward and backward; however, the specific adjustment depends on the specific model of the device. Generally, it may be inclined 5±2°forward and 15±2° backward.

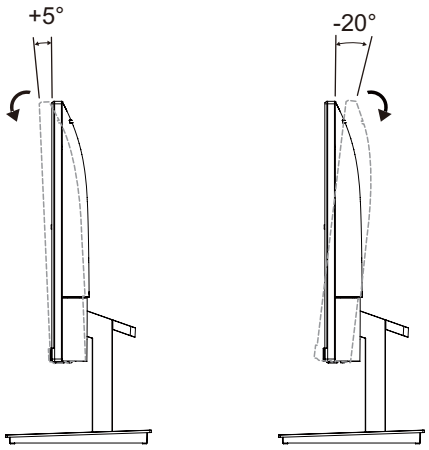

1.2.3 Wall Mounting

To wall mount the LCD display, do the following steps:

1. **Remove the base stand.**

   Detach the base from the base mount.Please refer to page 20.

2. **Remove the base mount.**

   a. Place the LCD display with the screen side down on a cushioned surface.

   b. Push the release button and detach the stand from the base mount.

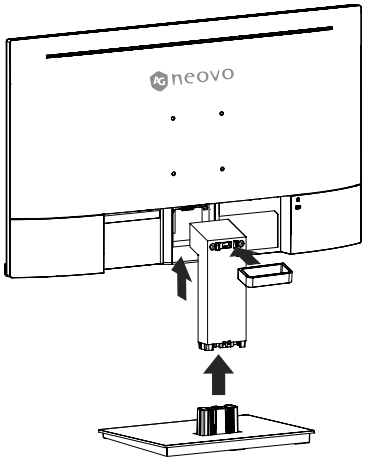

3. **Wall mount the LCD display.**

   Screw the mounting bracket to the VESA holes at the rear of the LCD display.

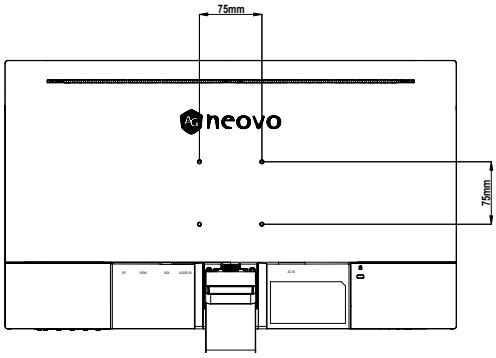

Note: *Take measures to prevent the LCD display from falling down and lessen possible injury and damage to the display in case of earthquakes or other disasters.*

- *Use only the 75 x 75 mm wall mount kit recommended by AG Neovo. All AG Neovo wall mount kits comply with VESA standard.*
- *Secure the LCD display on a solid wall strong enough to bear its weight.*
- *It is suggested to wall mount the LCD display without tilting it facing downward.*

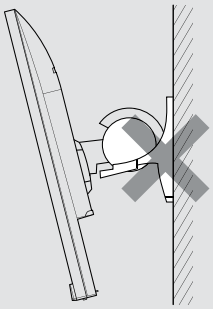

1.3 Overview

1.3.1 Front View

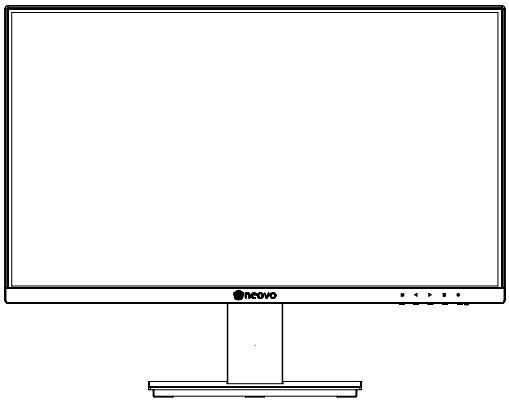

1.3.2 Control Buttons

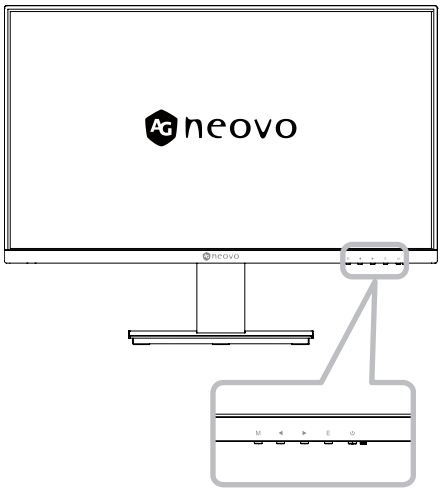

Button	Description
M Button	• Pops up the menu/Backs to the previous menu (in case of main menu, exits from the whole menu).
E Button	• When the menu is activated, press this key to select the function. • When the menu closes pressing this button will enter auto adjust, the function is for VGA only.
▲ Button	• When the menu opens, the value is incremented as the right function selection key. • When the menu is closed, go to situational mode switch. • Hot Key: Press repeatedly to select picture MODE.
▼ Button	• When the menu opens, the progress bar value is decremented as the left function selects the key.
(⏻)	Power button: Powers on/off the monitor.
LED indicator light	Long bright (White LED): Normal boot state Flicker (White LED): Power saving standby state. LED off: Off mode

1.3.3 Rear Vie4

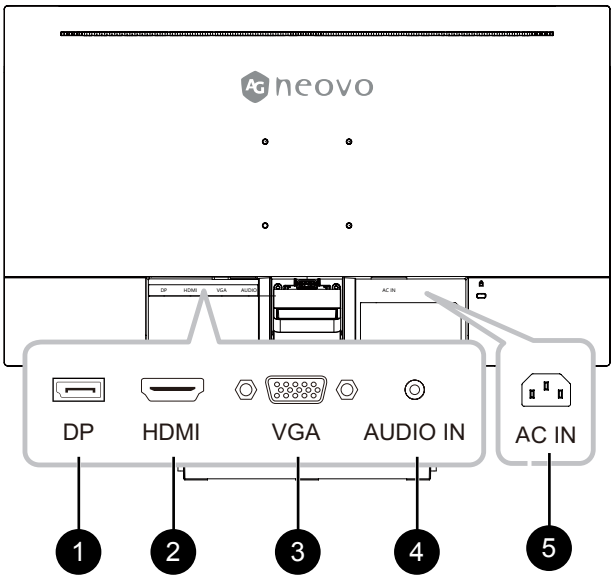

1 **DP Input**

Connect DisplayPort signals input.

2 **HDMI Input**

Connect HDMI signals input.

3 **VGA Input**

Connect VGA signals input.

4 **AUDIO IN**

Connect audio signals input (3.5 mm Stereo Audio Jack).

5 **AC IN**

AC power input.

CHAPTER 2: MAKING CONNECTIONS

CAUTION:

Make sure that the LCD display is not connected to the power outlet before making any connections. Connecting cables while the power is ON may cause possible electric shock or personal injury.

2.1 Connecting the AC Power

1. **Connect the power cord to the AC power input at the rear of the LCD display.**
2. **Connect the plug to a power outlet or power supply.**

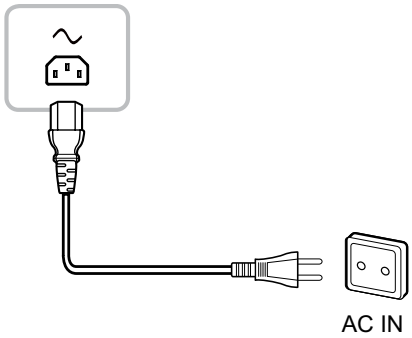

CAUTION:

When unplugging the power cord, hold the power cord by the plug head. Never pull by the cord.

2.2 Connecting Input Source Signals

Input source signals can be connected with either of the following cables:

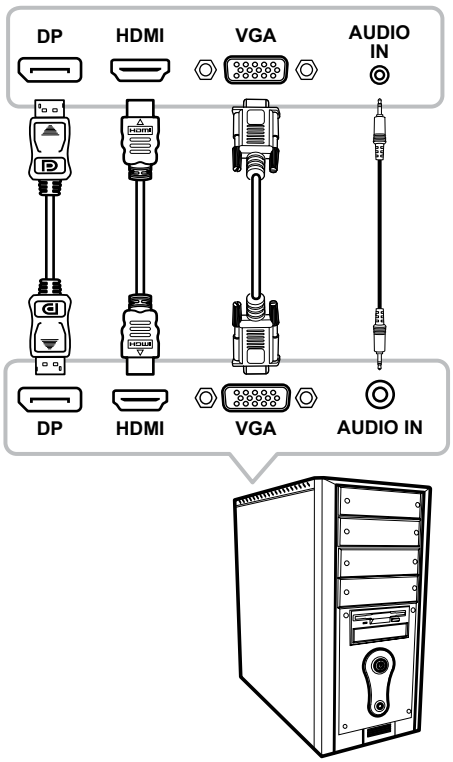

CHAPTER 3: ON SCREEN DISPLAY MENU

3.1 OSD Menu Tree

Main menu	Submenu	Third menu	Range	Description
Display	Brightness		0-100	Adjust display brightness
	Contrast		0-100	Adjust display contrast
	DCR	ON		Activate dynamic contrast
		Off		Close dynamic contrast
		Return		Return to the Display menu
		Exit		Exit from the menu
	Return			Return to the previous menu
	Exit			Exit from the menu
Language	English			Set display pre-research
	中文			
	Française			
	Deutsch			
	Italiano			
	Español			
	한국어			
	日本語			
	Русский			
	繁中			
	Tiệng Việt			
	Português			
	عربي			
	Return			Return to the previous menu
	Exit			Exit from the menu
Game	OD	On		Activate OD (Over Driver)
		Off		Close OD (Over Driver)
		Return		Return to the Gmae menu
		Exit		Exit from the menu
	Return			Return to the previous menu
	Exit			Exit from the menu

ON SCREEN DISPLAY MENU

Main menu	Submenu	Third menu	Range	Description
Mode	Standard			Set to standard mode
	Cinema			Set to Cinema mode
	FPS			Set to FPS mode
	RTS			Set to RTS mode
	Eye Saver			Set to Eye Saver mode
	Reture			Return to the previous menu
	Exit			Exit from the menu
Color Temp.	Cool			Set to Cool Color temperature
	Warm			Set to Warm Color temperature
	User	Red	0-100	Adjust the red output
		Green	0-100	Adjust the green output
		Blue	0-100	Adjust the blue output
		Return		Return to the Color Temp. menu
		Exit		Exit from the whole menu
	Return			Return to the previous menu
	Exit			Exit from the menu
Aspect		Auto		Automatically adjust picture aspect ratio
		16:9		Set the Picture Aspect to 16:9
		4:3		Set the Picture Aspect to 4:3
		Return		Return to the previous menu
		Exit		Exit from the menu
Input		VGA		Set the input source to VGA
		HDMI		Set the input source to HDMI
		Return		Return to the previous menu
		Exit		Exit from the menu
		DP		Connect DisplayPort signals input.

ON SCREEN DISPLAY MENU

Main menu	Submenu	Third menu	Range	Description
Other	Power Off	On		Automatically turn off after saving power for 1 minute
		Off		Close the function of timed switch-off
		Return		Return to Other menu
		Exit		Exit from the menu
	Gamma	Gammar1		Set the Gamma1
		Gammar2		Set the Gamma2
		Return		Return to Other menu
		Exit		Exit from the menu
	Volume		0-100	Adjust the Volume output
	Adjust	Auto Adjust		Automatically adjust the horizontal/vertical location, focusing and clock of pictures (only for VGA)
		Auto Color		Adjust the white balance of pictures (only for VGA)
		Clock	0-100	Adjust the picture clock to reduce vertical line noise (only for VGA)
		Phase	0-100	Adjust the picture phase to reduce horizontal noise (only for VGA)
		Return		Return to Other menu
		Exit		Exit from the menu
	Return			Return to Other menu
	Exit			Exit from the menu
Reset	Yes			Reset to factory setup
	No			Exit from this function
	Return			Return to the previous menu
	Exit			Exit from the menu
Exit				Exit from the menu

Note: *Availability of some menu items depend on the input source signal. If the menu is not available, it is disabled and greyed out.*

CHAPTER 4: ADJUSTING THE LCD DISPLAY

4.1 Colour Setting

1. **Press the MENU button to call out the OSD window.**
2. **Press the ◀ or ▶ button to select and press the MENU button to enter the Colour menu.**

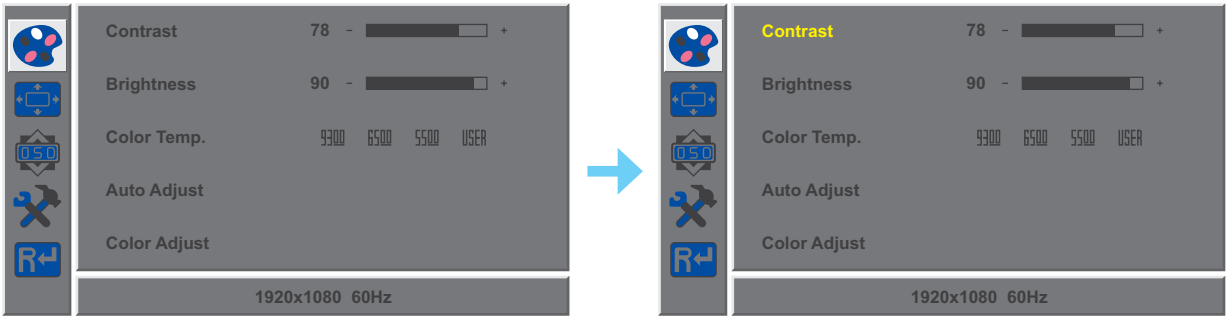

3. **Press the ◀ or ▶ button to select an option and press the MENU button to enter its submenu.**

Item	Function	Operation	Range
Contrast	Adjusts the difference between the black level and the white level.	Press the ◀ or ▶ button to adjust the value.	0 to 100
Brightness	Adjusts the luminance of the screen image.		
Color Temp. (Colour Temperature)	Provides several colour adjustment settings.	Press the ◀ or ▶ button to select the setting.	9300 6500 5500 USER
	Colour temperature can be set to: • **9300** - Applies a bluish tint for cooler colours. • **6500** - This is the default colour temperature commonly used for normal lighting conditions. • **5500** - Applies a reddish tint for warmer colours. • **USER** - This allows users to set the colour temperature by adjusting the red, green, or blue setting according to one's preference. a. Select **USER** and press the **MENU** button. b. Press the ◀ or ▶ button to select the colour you want to adjust. Then press the **MENU** button to enter its submenu. c. Press the ◀ or ▶ button to adjust the value (0 ~ 255). **Note:** *Activate **Reset** to return the colour to its default setting.*		
Auto Adjust	Automatically optimises image display. **Note:** *This menu option is only available if the input source is VGA.*	Press the **MENU** button to execute the function.	-
Color Adjust	Operates the white balance and automatically adjusts the colour settings. **Note:** *This menu option is only available if the input source is VGA.*		-

4.2 Picture Setting

Note: *This menu is only available if the input source is VGA.*

1. **Press the MENU button to call out the OSD window.**
2. **Press the ◀ or ▶ button to select and press the MENU button to enter the Picture menu.**

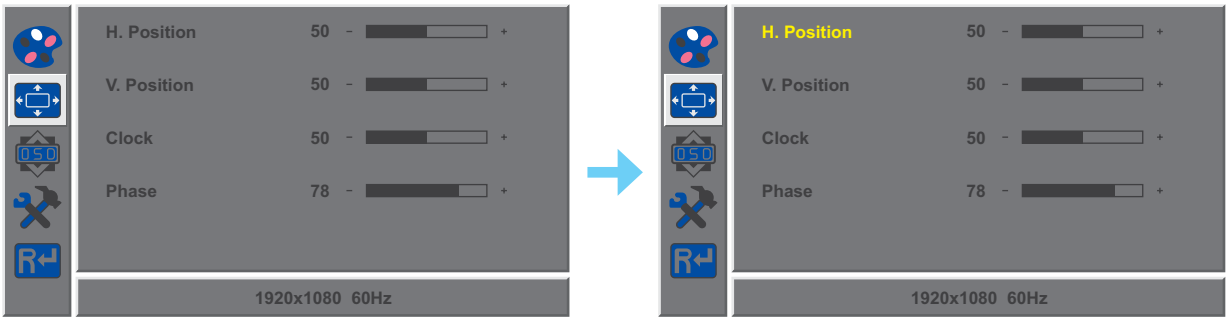

3. **Press the ◀ or ▶ button to select an option and press the MENU button to enter its submenu.**

Item	Function	Operation	Range
H. Position (Horizontal Position)	Moves the screen image to the left or right.	Press the ◀ or ▶ button to adjust the value.	0 to 100
V. Position (Vertical Position)	Moves the screen image up or down.		
Clock	Adjusts the frequency timing to synchronise with the video signal.		
Phase	Adjusts the phase timing to synchronise with the video signal.		

4.3 OSD Setting

1. **Press the MENU button to call out the OSD window.**
2. **Press the ◀ or ▶ button to select and press the MENU button to enter the OSD menu.**

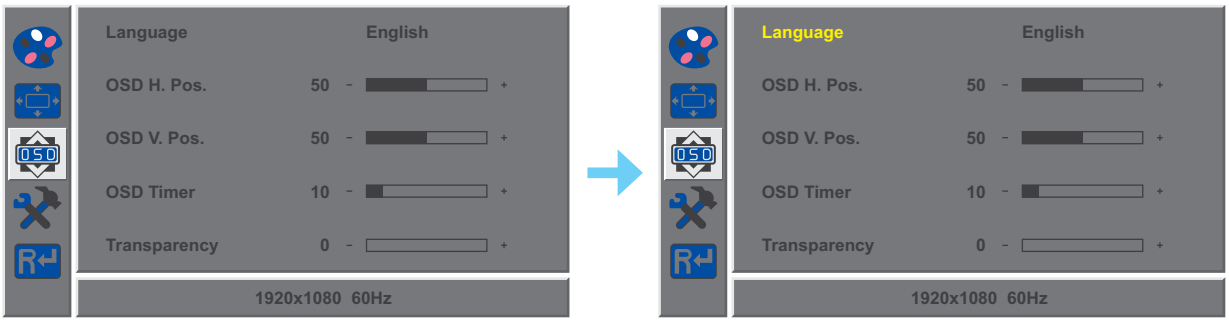

3. **Press the ◀ or ▶ button to select an option and press the MENU button to enter its submenu.**

Item	Function	Operation	Range
Language	Choose the language used for OSD menus.	Press the ◀ or ▶ button to select the setting.	English Français Deutsch Italiano Русский Spanish Portuguese 日本語 한국어 繁體中文 简体中文 Polski
OSD H. Pos. (Horizontal Position)	Moves the OSD window to the left or right of the screen.	Press the ◀ or ▶ button to adjust the value.	0 to 100
OSD V. Pos. (Vertical Position)	Moves the OSD window up or down the screen.		
OSD Timer	Sets the length of time (in seconds) the OSD screen is displayed. When the time elapses, the OSD screen is automatically inactivated.		5 to 60
Transparency	Adjusts the transparency level of the OSD screen.		0 to 4

4.4 Other Setting

1. **Press the MENU button to call out the OSD window.**
2. **Press the ◀ or ▶ button to select and press the MENU button to enter the Other menu.**

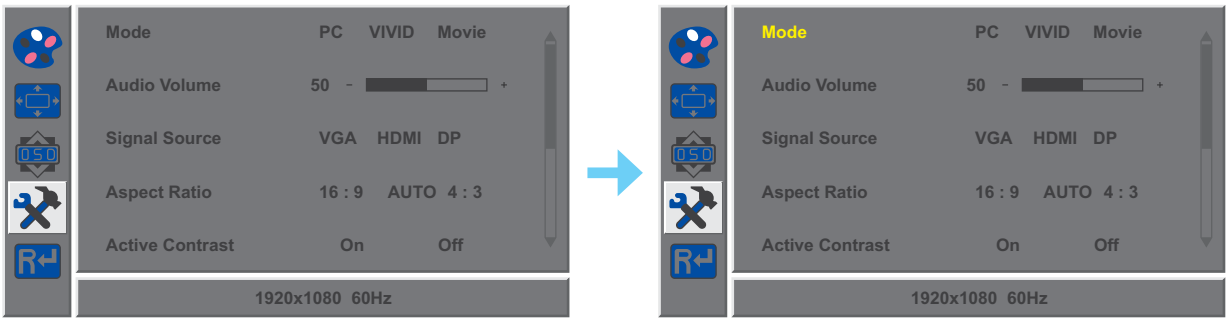

3. **Press the ◀ or ▶ button to select an option and press the MENU button to enter its submenu.**

Item	Function	Operation	Range
Mode	Selects the display mode.	Press the ◀ or ▶ button to select the setting.	PC VIVID Movie
Audio Volume	Adjusts the volume level of the built-in speaker.	Press the ◀ or ▶ button to adjust the value.	0 to 100
Signal Source	Switches the input source.	Press the ◀ or ▶ button to select the setting.	VGA HDMI DP
Aspect Ratio	Selects the aspect ratio of the screen image.		16:9 AUTO 4:3
Active Contrast	Automatically adjusts the image contrast according to the scene. **Note:** *If this function is* ***On****,* ***Colour*** *>* ***Brightness****/****Contrast*** *are grey out.*		On Off
Over Drive	Enhance the monitor response time.		On Off
Anti Blue Light	Enables/Disables the blue light filter function. When enabled, it decreases the amount of blue light displayed on the screen,ensuring users a comfortable viewing experience by reducing eyestrain after long periods of use.		0 to 100
ANTI-BURN-IN	ENABLE Enables or disables Anti-Burn-in™ function.		On Off
	INTERVAL (HOURS) Selects the interval time (hour) between activating the Anti-Burn-in™ function.		4 5 6 8

4.5 Reset Setting

1. **Press the MENU button to call out the OSD window.**
2. **Press the ◀ or ▶ button to select and press the MENU button to enter the Reset menu.**

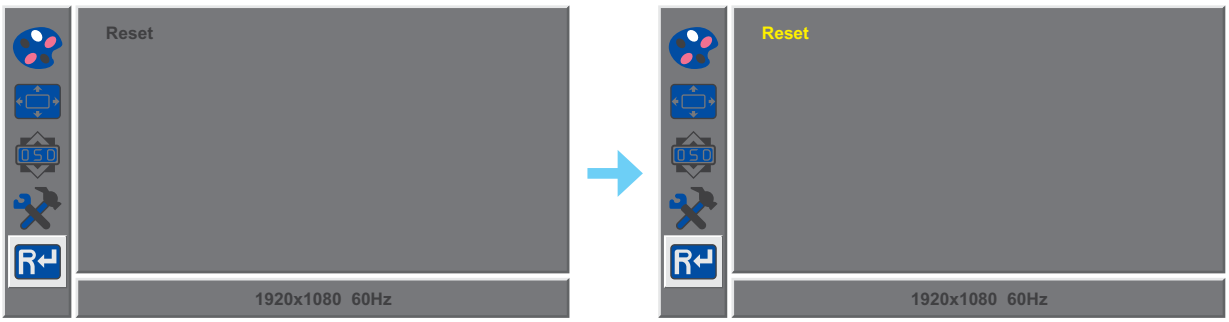

3. **Press the MENU button to restore your device to factory settings.**

CHAPTER 5: APPENDIX

5.1 Warning Messages

When any of these warning messages appear, check the following items.

Warning Message	Cause	Solution
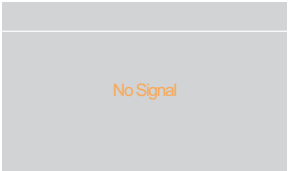	The LCD display cannot detect the input source signal.	√ Check if the input source is turned ON. √ Check if the signal cable is properly connected. √ Check if any pin inside the cable connector is twisted or broken.
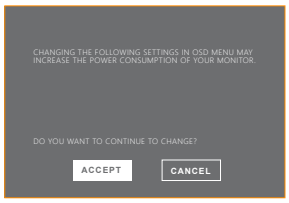	This warning message box will only show when the menu feature setting is changed for the first time.	• Press the ACCEPT button to continue the setting changes, or press the CANCEL button to disable the setting changes. • Note: The operation may vary from different product models.

5.2 Troubleshooting

Problems	Possible Cause and Solution
The power indicator light is not on	• Check if the power is on. • Check if the power cord is connected.
Impossible plug-and-play	• Check if the function of plug-and-play of the device is compatible with PC. • Check if the display card is compatible with the plug-and-play function. • Check if the signal line 15 pin d joint bent
Dimming picture	• Adjust brightness and contrast.
Flickering picture or picture with ripples	• There may be electrical appliances or equipment with electronic disturbance.
The power indicator light is on (flickering), but the monitor has no pictures.	• Check if the PC power is on. • Check if the PC display card is inserted properly. • Check if the signal cable of the monitor is correctly connected with the PC. • Check the signal cable plug of the monitor and make sure every pin has no bending. • Observe the indicator light by pressing the Caps Lock key on the PC keyboard and check if the PC is working.
Color shortage (red, green and blue)	• Check the signal cable of the monitor and make sure every pin has no bending.
Picture with color difference (white looks not white)	• Adjust RGB color or reselect color temperature.
Screen font blur under VGA signal	• Select the “E” to automatically adjust the image.
Screen color error under VGA signal	• Select “Auto color” in OSD to correct under the white output screen.

CHAPTER 6: SPECIFICATIONS

6.1 Display Specifications

		LA-2402
Panel	Panel Type	LED-Backlit TFT LCD (VA Technology)
	Panel Size	23.8”
	Max. Resolution	FHD 1920 x 1080
	Pixel Pitch	0.275 mm
	Brightness	250 cd/m^2
	Contrast Ratio	10,000 (DCR)
	Viewing Angle (H/V)	178°/178°
	Display Colour	16.7M
	Response Time	5 ms
Frequency (H/V)	H Freq.	30 kHz-82 kHz
	V Freq.	50 Hz-75 Hz
Input	DisplayPort	1.2 x 1
	HDMI	1.4 x 1
	VGA	15-Pin D-Sub x 1
Audio	Audio In	Stereo Audio Jack (3.5 mm)
	Internal Speaker	1W x 2
Power	Power Supply	Internal
	Power Requirements	AC 100-240V, 50/60 Hz
	On Mode	17W (On)
	Standby Mode	< 0.5W
	Off Mode	< 0.3W
Operating Conditions	Temperature	0°C-40°C (32°F-104°F)
	Humidity	20%-85% (non-condensing)
Storage Conditions	Temperature	-20°C-60°C (-4°F-140°F)
	Humidity	5%-95% (non-condensing)
Mounting	VESA FPMPMI	Yes (75 x 75 mm)
Stand	Tilt	-5° to 20°
Security	Kensington Security Slot	Yes
Dimensions	w/ base (W x H x D)	541.9 x 424.2 x 180.8 mm (21.3” x 16.7” x 7.1”)
	Packaging (W x H x D)	602.0 x407.0 x 122.0 mm (23.7” x 16.0” x 4.8”)
Weight	w/ base	3.3 kg (7.3 lb)
	Packaging	4.5 kg (9.9 lb)

Note: *All specifications are subject to change without prior notice.*

6.2 Display Dimensions

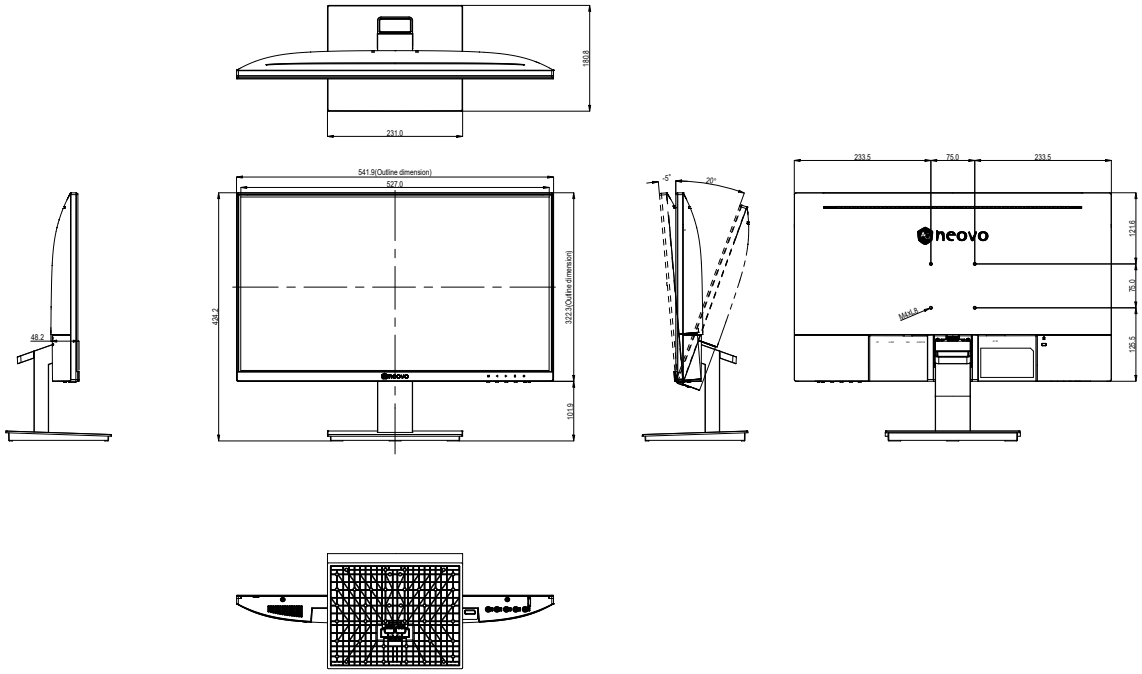

AG Neovo

Company Address: 5F-1, No. 3-1, Park Street, Nangang District, Taipei, 11503, Taiwan.

Copyright © 2022 AG Neovo. All rights reserved.

LA-2402 Eprel registration number: 1144514