Xerox® B305/B315 Multifunction Printer Quick Reference Guide

Copy

Making Copies

1. Load an original document into the ADF tray or on the scanner glass.

   Note: To avoid a cropped image, make sure that the original document and output have the same paper size.

2. From the home screen, touch **Copy**, and then specify the number of copies.
   If necessary, adjust the copy settings.
3. Copy the document.

   Note: To make a quick copy, from the control panel, press the **Start** button.

Copying on Both Sides of the Paper

1. Load an original document into the ADF tray or on the scanner glass.
2. From the home screen, touch **Copy > Sides**.
3. Adjust the settings.
4. Copy the document.

Copying Multiple Pages onto a Single Sheet

1. Load an original document into the ADF tray or on the scanner glass.
2. From the home screen, touch **Copy > Pages per Side**.
3. Adjust the settings.
4. Copy the document.

Email

Configuring the Email SMTP Settings

Configure the Simple Mail Transfer Protocol (SMTP) settings to send a scanned document through e-mail. The settings vary with each email service provider.

Before you begin, make sure that the printer is connected to a network and that the network is connected to the Internet.

Using the Email Setup Wizard in the Printer

Before using the wizard, make sure that the printer firmware is updated. For more information, refer to Updating Firmware.

1. From the home screen, touch **Email**.
2. Touch and type your e-mail address.
3. Type the password.
   - Depending on your e-mail service provider, type your account password, app password, or authentication password. For more information on the password, refer to the list of Email Service Providers, and then look for Device Password.
   - If your provider is not listed, contact your provider and ask for the Primary SMTP Gateway, Primary SMTP Gateway Port, Use SSL/TLS, and SMTP Server Authentication settings.
4. Touch **OK**.

Using the Settings Menu in the Printer

1. From the home screen, touch **Settings > E-mail > E-mail Setup**.
2. Configure the settings.
   - For more information on the password, refer to the list of Email Service Providers.
   - For email service providers that are not on the list, contact your provider and ask for the settings.

Using the Embedded Web Server

1. Open a web browser, and then type the printer IP address in the address field.
   - View the printer IP address on the printer home screen. The IP address appears as four sets of numbers separated by periods, such as 123.123.123.123.
   - If you are using a proxy server, then temporarily disable it to load the web page correctly.
2. Click **Settings > Email**.
3. From the Email Setup section, configure the settings.
   - For more information on the password, refer to the list of Email Service Providers.
   - For email service providers that are not on the list, contact your provider and ask for the settings.
4. Click **Save**.

Email Service Providers

To determine the SMTP settings of your email service provider, use the following tables.

Gmail™

Note: Make sure that two-step verification is enabled on your Google account.

To enable two-step verification, go to the Google Account Security page, log in to your account, then from the Signing in to Google section, click **2-Step Verification**.

SETTING	VALUE
Primary SMTP Gateway	smtp.gmail.com
Primary SMTP Gateway Port	587

SETTING	VALUE
Use SSL/TLS	Required
Require Trusted Certificate	Disabled
Reply Address	Your email address
SMTP Server Authentication	Login/Plain
Device-Initiated E-mail	Use Device SMTP Credentials
Device UserID	Your email address
Device Password	App password Note: To create an app password, go to the Google Account Security page, log in to your account, and from the Signing in to Google section, click **App passwords**.

Yahoo!® Mail

SETTING	VALUE
Primary SMTP Gateway	smtp.mail.yahoo.com
Primary SMTP Gateway Port	587
Use SSL/TLS	Required
Require Trusted Certificate	Disabled
Reply Address	Your email address
SMTP Server Authentication	Login/Plain
Device-Initiated E-mail	Use Device SMTP Credentials
Device UserID	Your email address
Device Password	App password Note: To create an app password, go to the Yahoo Account Security page, log in to your account, and then click **Generate app password**

Outlook Live

These settings apply to outlook.com and hotmail.com email domains.

SETTING	VALUE
Primary SMTP Gateway	smtp.office365.com
Primary SMTP Gateway Port	587
Use SSL/TLS	Required
Require Trusted Certificate	Disabled
Reply Address	Your email address
SMTP Server Authentication	Login/Plain
Device-Initiated E-mail	Use Device SMTP Credentials
Device UserID	Your email address
Device Password	Account password or app password • For accounts with two-step verification disabled, use your account password. • For accounts with two-step verification enabled, use an app password. To create an app password, go to the Outlook Live Account Managment page, then log in to your account.

AOL Mail

SETTING	VALUE
Primary SMTP Gateway	smtp.aol.com
Primary SMTP Gateway Port	587
Use SSL/TLS	Required
Require Trusted Certificate	Disabled
Reply Address	Your email address
SMTP Server Authentication	Login/Plain
Device-Initiated E-mail	Use Device SMTP Credentials

SETTING	VALUE
Device UserID	Your email address
Device Password	App password Note: To create an app password, go to the AOL Account Security page, log in to your account, then click **Generate app password**.

iCloud Mail

Note: Make sure that the two-step verification is enabled on your account.

SETTING	VALUE
Primary SMTP Gateway	smtp.mail.me.com
Primary SMTP Gateway Port	587
Use SSL/TLS	Required
Require Trusted Certificate	Disabled
Reply Address	Your email address
SMTP Server Authentication	Login/Plain
Device-Initiated E-mail	Use Device SMTP Credentials

SETTING	VALUE
Device UserID	Your email address
Device Password	App password Note: To create an app password, go to the iCloud Account Management page, log in to your account, then from the Security section, click **Generate Password**.

Comcast Mail

SETTING	VALUE
Primary SMTP Gateway	smtp.comcast.net
Primary SMTP Gateway Port	587
Use SSL/TLS	Required
Require Trusted Certificate	Disabled
Reply Address	Your email address
SMTP Server Authentication	Login/Plain
Device-Initiated Email	Use Device SMTP Credentials
Device UserID	Your email address
Device Password	Account password

Mail.com

SETTING	VALUE
Primary SMTP Gateway	smtp.mail.com
Primary SMTP Gateway Port	587
Use SSL/TLS	Required
Require Trusted Certificate	Disabled
Reply Address	Your email address
SMTP Server Authentication	Login/Plain
Device-Initiated E-mail	Use Device SMTP Credentials
Device UserID	Your email address
Device Password	Account password

Zoho Mail

SETTING	VALUE
Primary SMTP Gateway	smtp.zoho.com
Primary SMTP Gateway Port	587
Use SSL/TLS	Required
Require Trusted Certificate	Disabled
Reply Address	Your email address
SMTP Server Authentication	Login/Plain

SETTING	VALUE
Device-Initiated E-mail	Use Device SMTP Credentials
Device UserID	Your email address
Device Password	Account password or app password • For accounts with two-step verification disabled, use your account password. • For accounts with two-step verification enabled, use an app password. To create an app password, go to the Zoho Mail Account Security page, log in to your account, then from the Application-Specific Passwords section, click **Generate New Password**.

QQ Mail

Note: Make sure that the SMTP service is enabled on your account.

To enable the service, from the QQ Mail home page, click **Settings > Account**, then from the POP3/IMAP/SMTP/Exchange/CardDAV/CalDAV Service section, enable either **POP3/SMTP service** or **IMAP/SMTP service**.

SETTING	VALUE
Primary SMTP Gateway	smtp.qq.com
Primary SMTP Gateway Port	587
Use SSL/TLS	Required
Require Trusted Certificate	Disabled
Reply Address	Your email address

SETTING	VALUE
SMTP Server Authentication	Login/Plain
Device-Initiated E-mail	Use Device SMTP Credentials
Device UserID	Your email address
Device Password	Authorization code Note: To generate an authorization code, from the QQ Mail home page, click **Settings > Account**, then from the POP3/IMAP/SMTP/Exchange/CardDAV/CalDAV Service section, click **Generate authorization code**

NetEase Mail (mail.163.com)

Note: Make sure that the SMTP service is enabled on your account.

To enable the service, from the NetEase Mail home page, click **Settings > POP3/SMTP/IMAP**, and then enable either **IMAP/SMTP service** or **POP3/SMTP service**.

SETTING	VALUE
Primary SMTP Gateway	smtp.163.com
Primary SMTP Gateway Port	465
Use SSL/TLS	Required
Require Trusted Certificate	Disabled
Reply Address	Your email address

SETTING	VALUE
SMTP Server Authentication	Login/Plain
Device-Initiated Email	Use Device SMTP Credentials
Device UserID	Your email address
Device Password	Authorization password Note: The authorization password is provided when IMAP/SMTP service or POP3/SMTP service is enabled.

NetEase Mail (mail.126.com)

Note: Make sure that the SMTP service is enabled on your account.

To enable the service, from the NetEase Mail home page, click **Settings > POP3/SMTP/IMAP**, then enable either **IMAP/SMTP service** or **POP3/SMTP service**.

SETTING	VALUE
Primary SMTP Gateway	smtp.126.com
Primary SMTP Gateway Port	465
Use SSL/TLS	Required
Require Trusted Certificate	Disabled
Reply Address	Your email address
SMTP Server Authentication	Login/Plain
Device-Initiated Email	Use Device SMTP Credentials

SETTING	VALUE
Device UserID	Your email address
Device Password	Authorization password Note: The authorization password is provided when IMAP/SMTP service or POP3/SMTP service is enabled.

NetEase Mail (mail.yeah.net)

Note: Make sure that the SMTP service is enabled on your account.

To enable the service, from the NetEase Mail home page, click **Settings > POP3/SMTP/IMAP**, and then enable either **IMAP/SMTP service** or **POP3/SMTP service**.

SETTING	VALUE
Primary SMTP Gateway	smtp.yeah.net
Primary SMTP Gateway Port	465
Use SSL/TLS	Required
Require Trusted Certificate	Disabled
Reply Address	Your email address
SMTP Server Authentication	Login/Plain
Device-Initiated Email	Use Device SMTP Credentials

SETTING	VALUE
Device UserID	Your email address
Device Password	Authorization password Note: The authorization password is provided when IMAP/SMTP service or POP3/SMTP service is enabled.

Sohu Mail

Note: Make sure that the SMTP service is enabled on your account.

To enable the service, from the Sohu Mail home page, click **Options > Settings > POP3/SMTP/IMAP**, and then enable either **IMAP/SMTP service** or **POP3/SMTP service**.

SETTING	VALUE
Primary SMTP Gateway	smtp.sohu.com
Primary SMTP Gateway Port	465
Use SSL/TLS	Required
Require Trusted Certificate	Disabled
Reply Address	Your email address
SMTP Server Authentication	Login/Plain
Device-Initiated Email	Use Device SMTP Credentials

SETTING	VALUE
Device UserID	Your email address
Device Password	Independent password Note: The independent password is provided when IMAP/SMTP service or POP3/SMTP service is enabled.

Sina Mail

Note: Make sure that the POP3/SMTP service is enabled on your account.

To enable the service, from the Sina Mail home page, click **Settings > More settings > User-end POP/IMAP/SMTP**, and then enable **POP3/SMTP service**.

SETTING	VALUE
Primary SMTP Gateway	smtp.sina.com
Primary SMTP Gateway Port	587
Use SSL/TLS	Required
Require Trusted Certificate	Disabled
Reply Address	Your email address
SMTP Server Authentication	Login/Plain
Device-Initiated Email	Use Device SMTP Credentials

SETTING	VALUE
Device UserID	Your email address
Device Password	Authorization code Note: To create an authorization code, from the email home page, click **Settings > More settings > User-end POP/IMAP/ SMTP**, and then enable **Authorization code status**.

- If you encounter errors using the settings provided, then contact your email service provider.
- For email service providers that are not on the list, contact your provider and ask for the settings.

Sending an Email

Before you begin, make sure that the SMTP settings are configured. For more information, refer to Configuring the Email SMTP Settings.

Using the Control Panel

1. Load an original document into the ADF tray or on the scanner glass.
2. From the home screen, touch **Email**, and then enter the needed information.
3. If necessary, configure the output file type settings.
4. Send the email.

Using a Shortcut Number

1. Load an original document into the ADF tray or on the scanner glass.
2. From the home screen, touch **Shortcuts > Email**.
3. Select the shortcut number.
4. Send the email.

Scan

Scanning to a Computer

Before you begin, make sure that:

- The printer firmware is updated. For more information, refer to Updating Firmware.
- The computer and the printer are connected to the same network.

For Windows Users

Note: Make sure that the printer is added to the computer. For more information, refer to the *User Guide*.

1. Load an original document into the automatic document feeder or on the scanner glass.
2. From the computer, open **Windows Fax and Scan**.
3. From the Source menu, select a scanner source.
4. If necessary, change the scan settings.
5. Scan the document.

For Macintosh Users

Note: Make sure that the printer is added to the computer. For more information, refer to the *User Guide*.

1. Load an original document into the automatic document feeder or on the scanner glass.
2. From the computer, do either of the following:
   a. Open **Image Capture**.
   b. Open **Image Capture**.
   c. Open **Printers & Scanners**, and then select a printer. Click **Scan > Open Scanner**.
3. From the Scanner window, do one or more of the following:
   a. Select where you want to save the scanned document.
   b. Select the size of the original document.
   c. To scan from the ADF, select **Document Feeder** from the Scan Menu or enable **Use Document Feeder**.
   d. If necessary, configure the scan settings.
4. Click **Scan**.

Fax

Sending a Fax

Using the control panel

1. Load an original document into the ADF tray or on the scanner glass.
2. From the home screen, touch **Fax**, and then enter the needed information.

   If necessary, adjust the settings.
3. Fax the document.

Print

Printing from a computer

Note: For labels, card stock, and envelopes, set the paper size and type in the printer before printing the document.

1. From the document that you are trying to print, open the Print dialog.
2. If necessary, adjust the settings.
3. Print the document.

Printing from a mobile device

Printing from a Mobile Device Using Mopria™ Print Service

Mopria Print Service is a mobile printing solution for mobile devices running on Android™ version 10.0 or later. It allows you to print directly to any Mopria-certified printer.

Note: Make sure that you download the Mopria Print Service application from the Google Play store and enable it in the mobile device.

1. From your Android mobile device, launch a compatible application or select a document from your file manager.
2. Tap **More OptionsPrint**.
3. Select a printer, and then adjust the settings, if necessary.
4. Tap **Print**.

Printing from a Mobile Device Using AirPrint®

The AirPrint software feature is a mobile printing solution that allows you to print directly from Apple devices to an AirPrint-certified printer.

- Make sure that the Apple device and the printer are connected to the same network. If the network has multiple wireless hubs, then make sure that both devices are connected to the same subnet.
- This application is supported only in some Apple devices.

1. From your mobile device, select a document from your file manager or launch a compatible application.
2. Tap **Share/Upload > Print**.
3. Select a printer, and then adjust the settings, if necessary.
4. Print the document.

Printing from a Mobile Device Using Wi-Fi Direct®

Wi-Fi Direct is a printing service that lets you print to any Wi-Fi Direct-ready printer.

Ensure that the mobile device has a direct wireless connection to the printer. For more information, refer to Connecting a Mobile Device to the Printer.

1. From your mobile device, launch a compatible application or select a document from your file manager.
2. Depending on your mobile device, do one of the following:
   - Tap ⋮ > **Print**.
   - Tap ⬆ > **Print**.
   - Tap ··· > **Print**.
3. Select a printer, and then adjust the settings, if necessary.
4. Print the document.

Maintain the Printer

Attaching the Cables

CAUTION—SHOCK HAZARD: To avoid the risk of electrical shock, do not set up this product or make any electrical or cabling connections, such as the power cord, fax feature, or telephone, during a lightning storm.

CAUTION—POTENTIAL INJURY: To avoid the risk of fire or electrical shock, connect the power cord to an appropriately rated and properly grounded electrical outlet that is near the product and easily accessible.

CAUTION—POTENTIAL INJURY: To avoid the risk of fire or electrical shock, use only the power cord provided with this product or the manufacturer-authorized replacement.

CAUTION—POTENTIAL INJURY: To reduce the risk of fire, use only a 26 AWG or larger telecommunications (RJ-11) cord when connecting this product to the public switched telephone network. For users in Australia, the cord must be approved by the Australian Communications and Media Authority.

Warning—Potential Damage: To avoid loss of data or printer malfunction, do not touch the USB cable, any wireless network adapter, or the printer in the areas shown while actively printing.

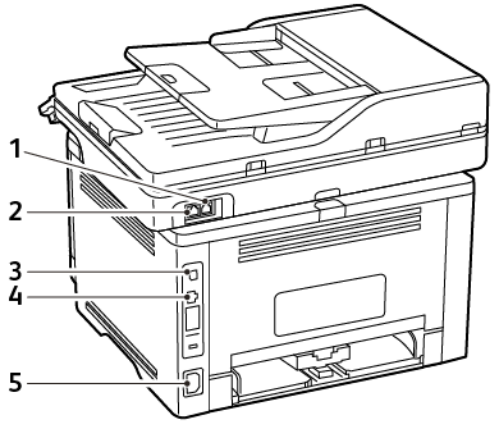

NUMBER	PRINTER PORT	FUNCTION
1	LINE port	Connect the printer to an active telephone line through a standard wall jack (RJ-11), DSL filter, or VoIP adapter, or any other adapter that allows you to access the telephone line to send and receive faxes. To enable manual fax, use a corded fax splitter.
2	Ethernet port	Connect the printer to a network.
3	USB printer port	Connect the printer to a computer.
4	Power cord socket	Connect the printer to a properly grounded electrical outlet.

Replacing a Toner Cartridge

1. Open the front door, then firmly push it down.

> **Warning—Potential Damage:** To prevent damage from electrostatic discharge, touch any exposed metal frame of the printer before accessing or touching interior areas of the printer.

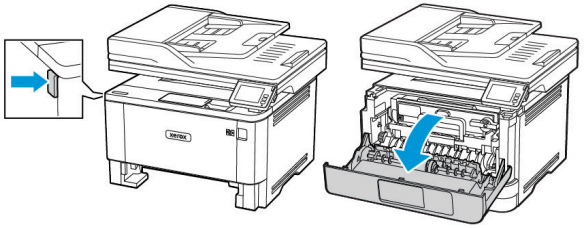

2. Remove the imaging unit.

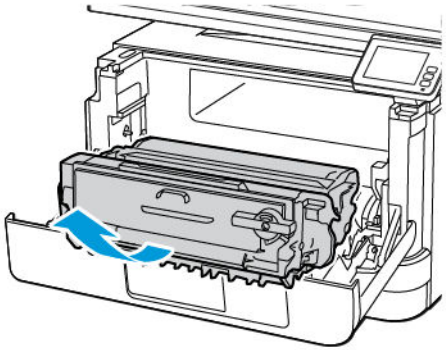

3. Twist the blue latch, then remove the used toner cartridge from the imaging unit.

> **Warning—Potential Damage:** Do not expose the imaging unit to direct light for more than 10 minutes. Extended exposure to light may cause print quality problems.

> **Warning—Potential Damage:** Do not touch the photoconductor drum. Doing so may affect the quality of future print jobs.

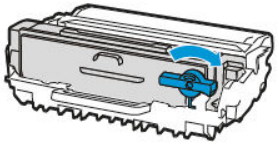

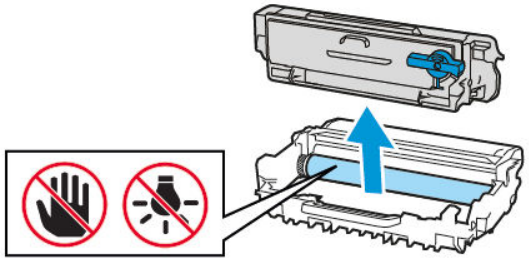

4. Unpack the new toner cartridge.
5. To redistribute the toner, shake the toner cartridge.

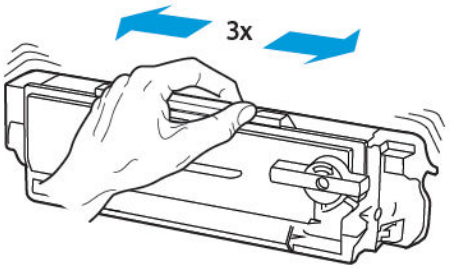

6. Insert the new toner cartridge into the imaging unit until it *clicks* into place.

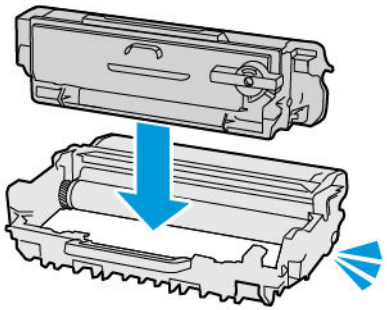

7. Insert the imaging unit.

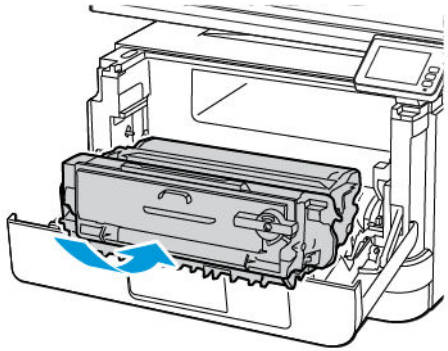

8. Close the door.

Cleaning the Scanner

1. Open the scanner cover.

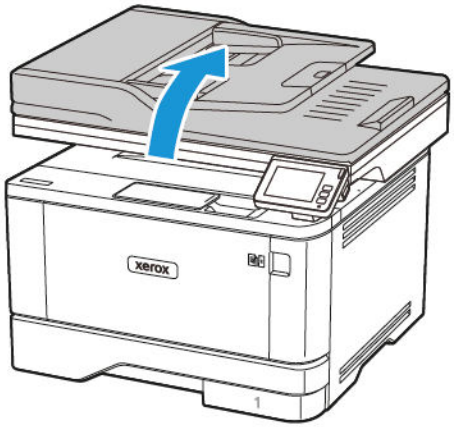

2. Using a damp, soft, lint-free cloth, wipe the following areas:
   a. ADF glass pad

   Note: In some printer models, this location has an ADF glass instead of a pad.

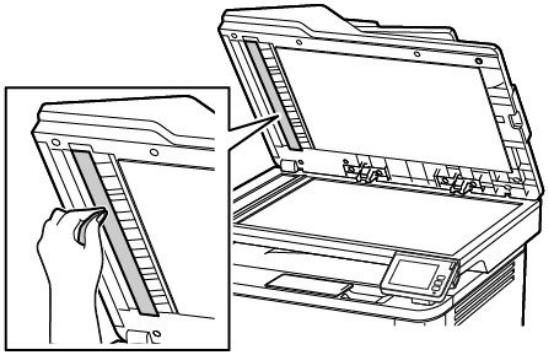

   b. Scanner glass pad

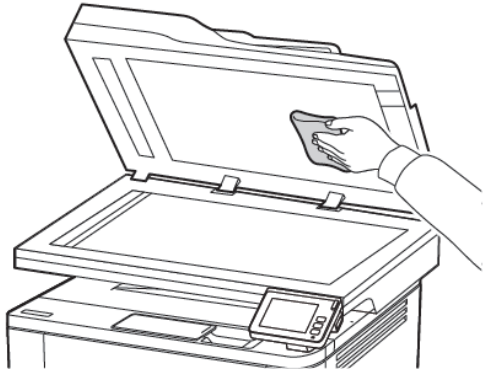

   c. ADF glass

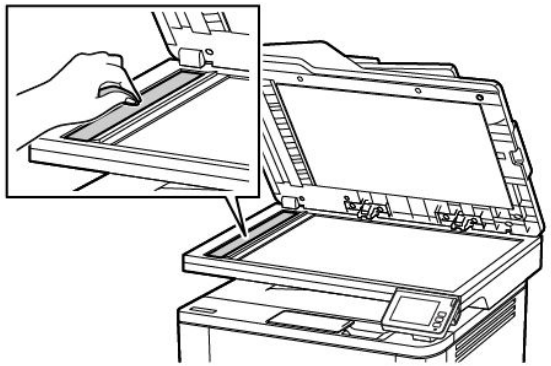

   d. Scanner glass

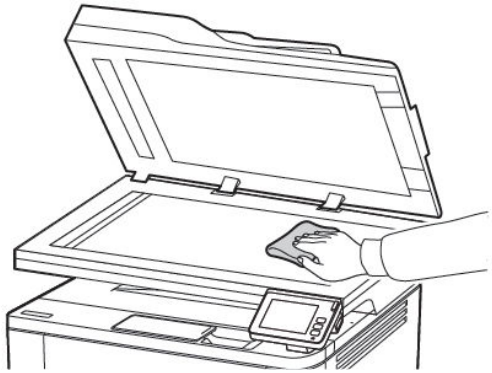

3. Close the scanner cover.

Loading Trays

CAUTION—TIPPING HAZARD: To reduce the risk of equipment instability, load each tray separately. Keep all other trays closed until needed.

1. Remove the tray.

   Note: To avoid paper jams, do not remove the tray while the printer is busy.

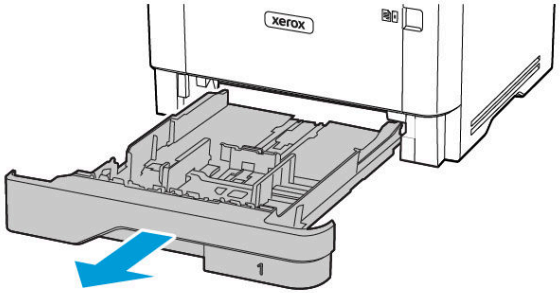

2. Adjust the guides to match the size of the paper that you are loading.

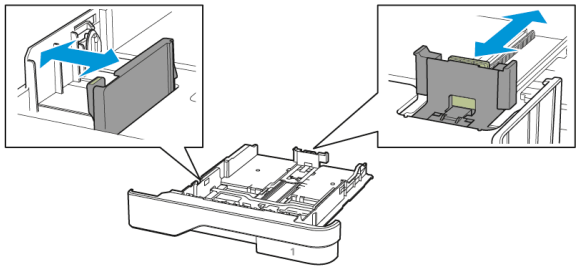

3. Flex, fan, and align the paper edges before loading.

4. Load the paper stack with the printable side facedown, and then make sure that the guides fit snugly against the paper.
   - Load letterhead facedown with the header toward the front of the tray for one-sided printing.
   - Load letterhead faceup with the header toward the back of the tray for two-sided printing.
   - Do not slide paper into the tray.
   - To avoid paper jams, make sure that the stack height is below the maximum paper fill indicator.

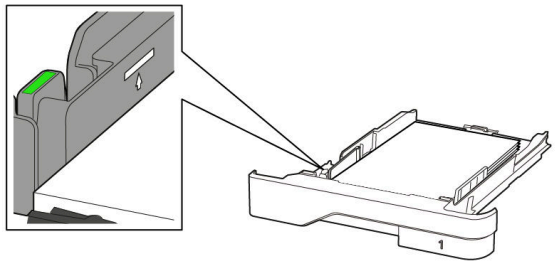

5. Insert the tray.
   If necessary, set the paper size and paper type from the control panel to match the paper loaded.

Loading the Multipurpose Feeder

1. Open the multipurpose feeder.

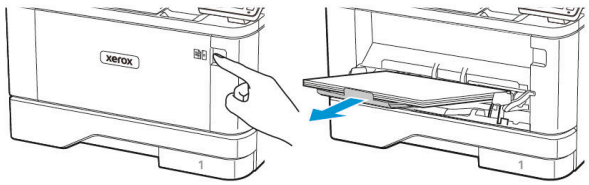

2. Flex, fan, and align the paper edges before loading.

3. Load paper with the printable side faceup.
   - For one-sided printing, load letterhead faceup with the header toward the rear of the printer.
   - For two-sided printing, load letterhead facedown with the header toward the front of the printer.
   - Load envelopes with the flap facedown on the left side.

> **Warning—Potential Damage:** Do not use envelopes with stamps, clasps, snaps, windows, coated linings, or self-stick adhesives.

4. Adjust the guide to match the size of the paper that you are loading.

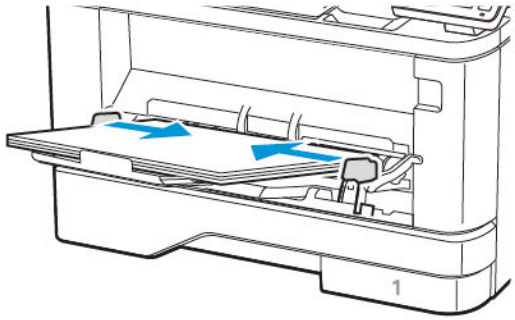

5. From the control panel, set the paper size and paper type to match the paper loaded.

Setting the Paper Size and Type

1. From the control panel, navigate to:

   Settings > OK > Paper > OK > Tray Configuration > OK > Paper Size/Type > OK, then select a paper source

2. Set the paper size and type.

Updating Firmware

Some applications require a minimum device firmware level to operate correctly.

For more information on updating the device firmware, contact your customer service representative.

1. Open a web browser, and then type the printer IP address in the address field.
   - View the printer IP address on the printer home screen. The IP address appears as four sets of numbers separated by periods, such as 123.123.123.123.
   - If you are using a proxy server, then temporarily disable it to load the web page correctly.
2. Click **Settings > Device > Update Firmware**.
3. Choose one of the following:
   - Click **Check for updates > I agree, start update**.
   - Upload the flash file. To upload the flash file, perform the following steps.
   To get the latest firmware, go to www.xerox.com, and search for your printer model.

   1. Browse to the flash file.

   Note: Make sure that you have extracted the firmware zip file.

   2. Click **Upload > Start**.

Connecting the Printer to a Wi-Fi Network

Before you begin, make sure that:

- Active Adapter is set to Auto. From the home screen, touch **Settings > Network/Ports > Network Overview > Active Adapter**.
- The Ethernet cable is not connected to the printer.

Using the Wireless Setup Wizard in the Printer

Before using the wizard, make sure that the printer firmware is updated. For more information, refer to Updating Firmware.

1. From the home screen, touch the **Wifi** button, then select **Set up now**.

2. Select a Wi-Fi network, and then type the network password.
3. Touch **Done**.

Using the Settings Menu in the Printer

1. From the home screen, touch **Settings > Network/Ports > Wireless > Setup On Printer Panel > Choose Network**.
2. Select a Wi-Fi network, then type the network password.

Note: For Wi-Fi-network-ready printer models, a prompt to set up the Wi-Fi network appears during initial setup.

Configuring Wi-Fi Direct

Wi-Fi Direct is a Wi-Fi-based peer-to-peer technology that allows wireless devices to connect directly to a Wi-Fi Direct-enabled printer without using an access point (wireless router).

1. From the home screen, touch **Settings** > **Network/Ports** > **Wi-Fi Direct**.
2. Configure the settings.
   - **Enable Wi-Fi Direct**—Enables the printer to broadcast its own Wi-Fi Direct network.
   - **Wi-Fi Direct Name**—Assigns a name for the Wi-Fi Direct network.
   - **Wi-Fi Direct Password**—Assigns the password for negotiating the wireless security when using the peer-to-peer connection.
   - **Show Password on Setup Page**—Shows the password on the Network Setup Page.
   - **Auto-Accept Push Button Requests**—Lets the printer accept connection requests automatically.

Note: Accepting push-button requests automatically is not secured.

Note: Notes:

- By default, the Wi-Fi Direct network password is not visible on the printer display. To show the password, enable the password peek icon. From the home screen, touch **Settings** > **Security** > **Miscellaneous** > **Enable Password/PIN Reveal**.
- To know the password of the Wi-Fi Direct network without showing it on the printer display, from the home screen touch **Settings** > **Reports** > **Network** > **Network Setup Page**.

Connecting a Computer to the Printer

Before connecting your computer, make sure that Wi-Fi Direct has been configured. For more information, see Configuring Wi-Fi Direct.

For Windows Users

1. Open the printers folder.
2. Select the printer you want to update, and then do either of the following:
   - For Windows 7 or later, select **Printer properties**.
   - For earlier versions, select **Properties**.
3. Navigate to the Configuration tab, and then select **Update Now - Ask Printer**.
4. Apply the changes.

For Macintosh Users

1. From System Preferences in the Apple menu, navigate to your printer, and then select **Options & Supplies**.
2. Navigate to the list of hardware options, and then add any installed options.
3. Apply the changes.

Connecting a Mobile Device to the Printer

Before connecting your mobile device, make sure that Wi-Fi Direct has been configured. For more information, see Configuring Wi-Fi Direct.

Connecting Using Wi-Fi Direct

Note: These instructions apply only to Android mobile devices.

1. From the mobile device, go to the settings menu.
2. Enable **Wi-Fi**, and then tap **Wi-Fi Direct**.
3. Select the printer Wi-Fi Direct name.
4. Confirm the connection on the printer control panel.

Connecting Using Wi-Fi

1. From the mobile device, go to the settings menu.
2. Tap **Wi-Fi**, and then select the printer Wi-Fi Direct name.

Note: The string DIRECT-xy (where x and y are two random characters) is added before the Wi-Fi Direct name.

3. Enter the Wi-Fi Direct password.

Clearing Jams

Avoiding Jams

Load Paper Properly

- Make sure that the paper lies flat in the tray.

CORRECT LOADING OF PAPER	INCORRECT LOADING OF PAPER
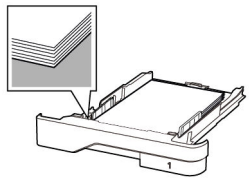	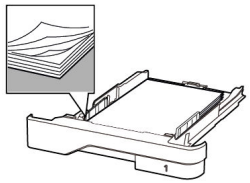

- Do not load or remove a tray while the printer is printing.
- Do not load too much paper. Make sure that the stack height is below the maximum paper fill indicator.
- Do not slide paper into the tray. Load paper as shown in the illustration.

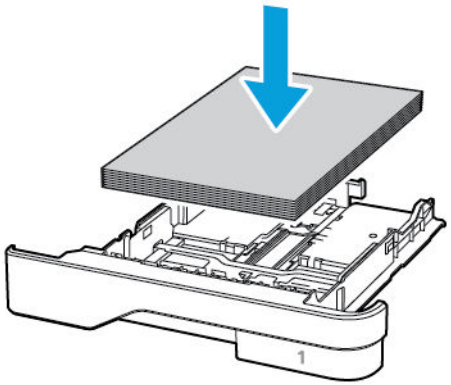

- Make sure that the paper guides are positioned correctly and are not pressing tightly against the paper or envelopes.
- Push the tray firmly into the printer after loading paper.

Use Recommended Paper

- Use only recommended paper or specialty media.
- Do not load paper that is wrinkled, creased, damp, bent, or curled.
- Flex, fan, and align the paper edges before loading.

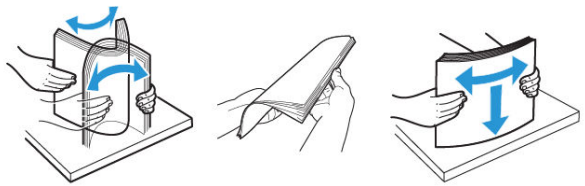

- Do not use paper that has been cut or trimmed by hand.
- Do not mix paper sizes, weights, or types in the same tray.
- Make sure that the paper size and type are set correctly on the computer or printer control panel.
- Store paper according to manufacturer recommendations.

Identifying Jam Locations

- When Jam Assist is set to **On**, the printer might attempt to flush blank pages or pages with partial prints after clearing the jam. Check your printed output for blank pages.
- When Jam Recovery is set to **On** or **Auto**, the printer reprints jammed pages.

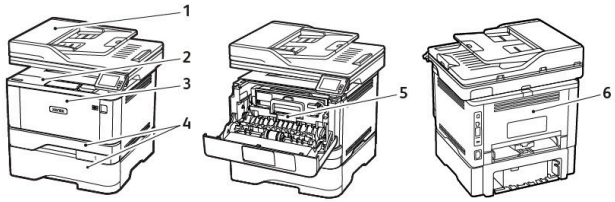

1. Automatic Document Feeder (ADF)
2. Output Tray
3. Multipurpose Feeder
4. Trays
5. Duplex Unit
6. Rear Door

Paper Jam in the Automatic Document Feeder (ADF)

1. Remove all original documents from the ADF tray.
2. Open the ADF cover.

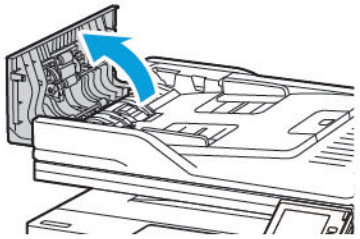

3. Remove the jammed paper.

Note: Ensure that all paper fragments are removed.

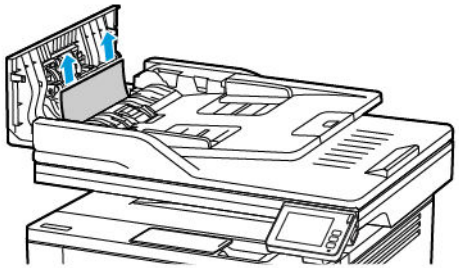

4. Close the ADF cover.

Paper Jam in the Standard Output Tray

1. Raise the scanner, and then remove the jammed paper.

Note: Ensure that all paper fragments are removed.

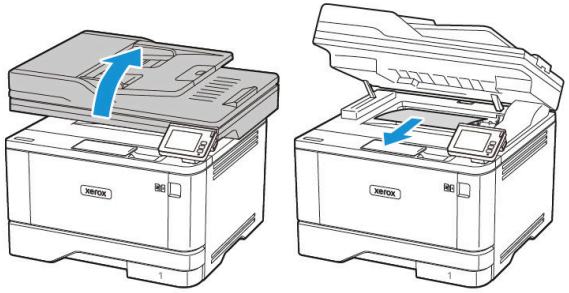

2. Lower the scanner.

Paper Jam in the Multipurpose Feeder

1. Remove paper from the multipurpose feeder.

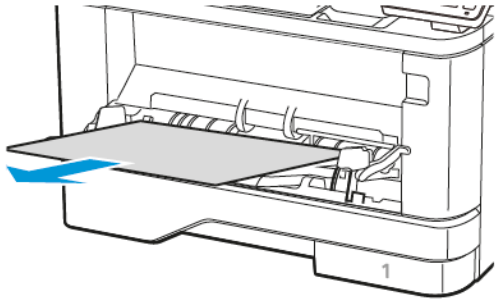

2. Remove the jammed paper.

Note: Ensure that all paper fragments are removed.

3. Close the multipurpose feeder.
4. Open the front door.

Warning—Potential Damage: To prevent damage from electrostatic discharge, touch any exposed metal frame of the printer before accessing or touching interior areas of the printer.

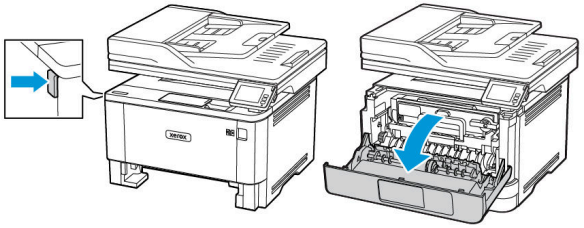

5. Remove the imaging unit.

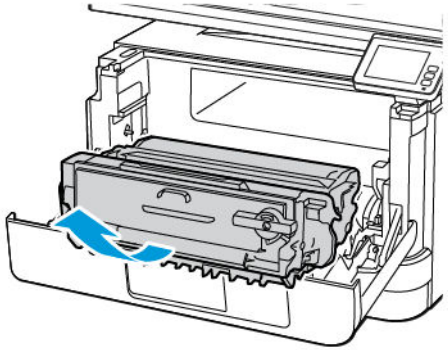

Warning—Potential Damage: Do not expose the imaging unit to direct light for more than 10 minutes. Extended exposure to light may cause print quality problems.

Warning—Potential Damage: Do not touch the photoconductor drum. Doing so may affect the quality of future print jobs.

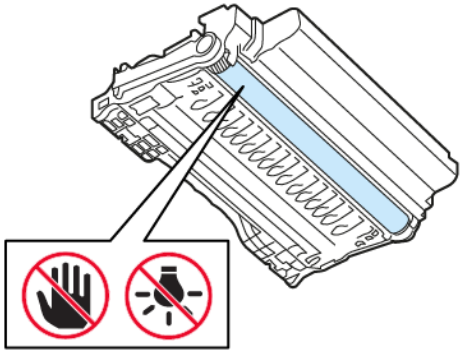

6. Remove the jammed paper.

CAUTION—HOT SURFACE: The inside of the printer might be hot. To reduce the risk of injury from a hot component, allow the surface to cool before touching it.

Note: Make sure that all paper fragments are removed.

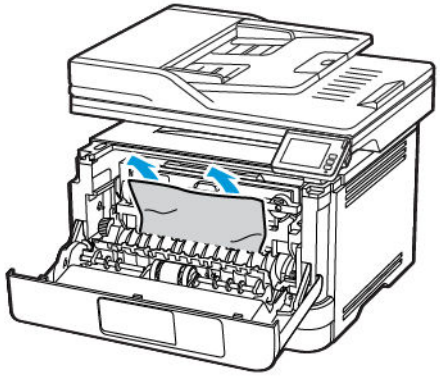

7. Insert the imaging unit.

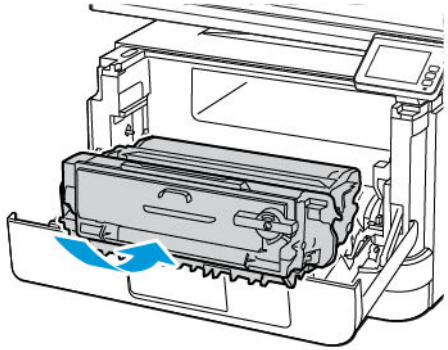

8. Close the door.

9. Open the multipurpose feeder.

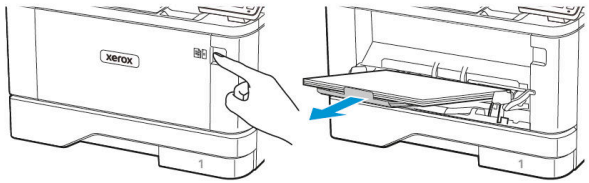

10. Flex, fan, and align the paper edges before loading.

11. Reload paper.

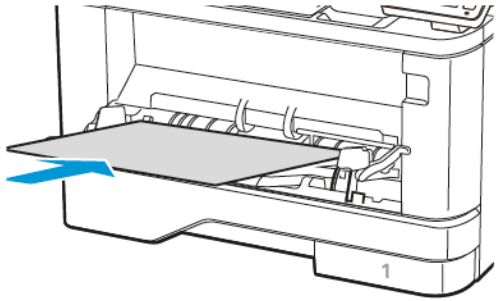

Paper Jam in Trays

1. Remove the tray.

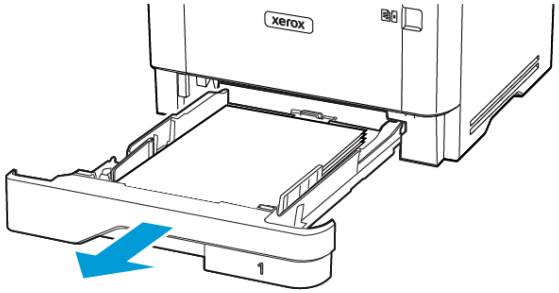

2. Open the front door.

> **Warning—Potential Damage:** To prevent damage from electrostatic discharge, touch any exposed metal frame of the printer before accessing or touching interior areas of the printer.

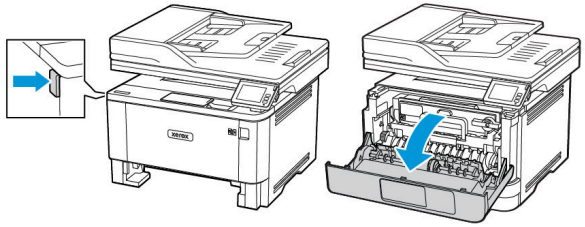

3. Remove the imaging unit.

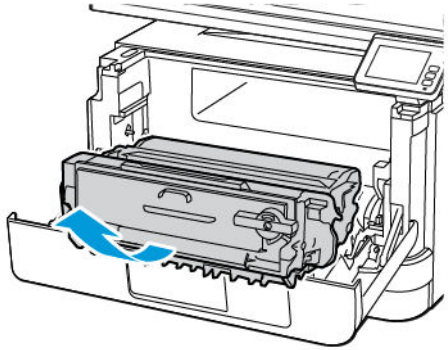

> **Warning—Potential Damage:** Do not expose the imaging unit to direct light for more than 10 minutes. Extended exposure to light may cause print quality problems.

> **Warning—Potential Damage:** Do not touch the photoconductor drum. Doing so may affect the quality of future print jobs.

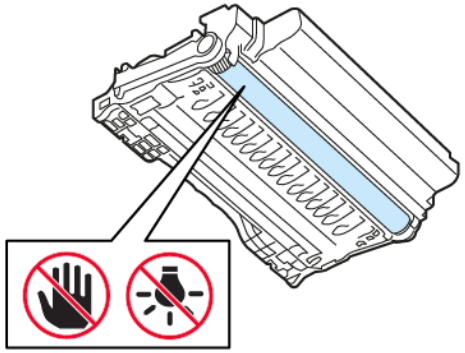

4. Remove the jammed paper.

CAUTION—HOT SURFACE: The inside of the printer might be hot. To reduce the risk of injury from a hot component, allow the surface to cool before touching it.

Note: Make sure that all paper fragments are removed.

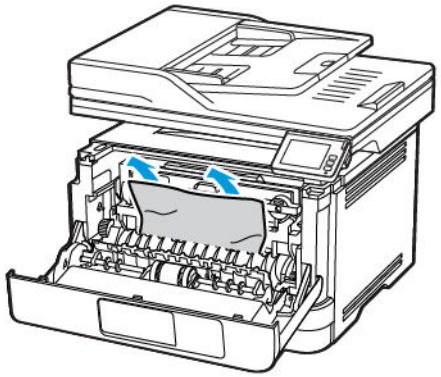

5. Insert the imaging unit.

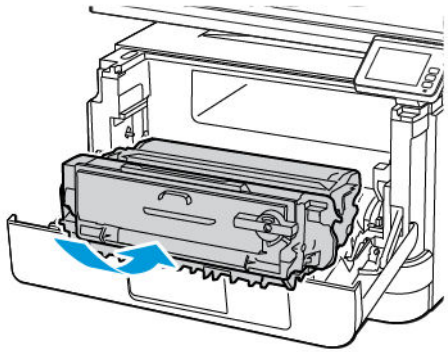

6. Close the front door, then insert the tray.

7. Open the rear door.

CAUTION—HOT SURFACE: The inside of the printer might be hot. To reduce the risk of injury from a hot component, allow the surface to cool before touching it.

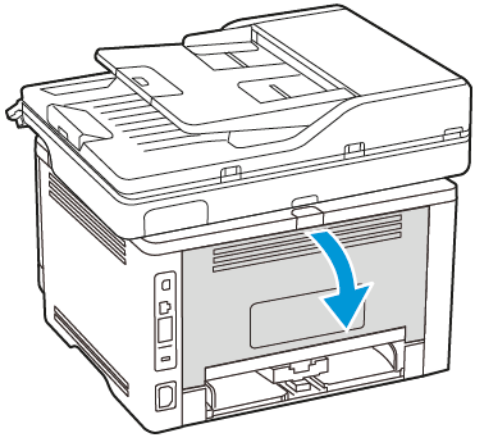

8. Remove the jammed paper.

Note: Make sure that all paper fragments are removed.

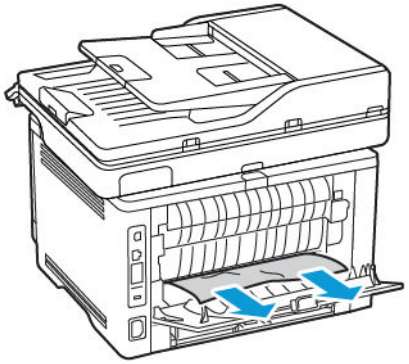

9. Close the rear door.

10. Remove the optional tray.

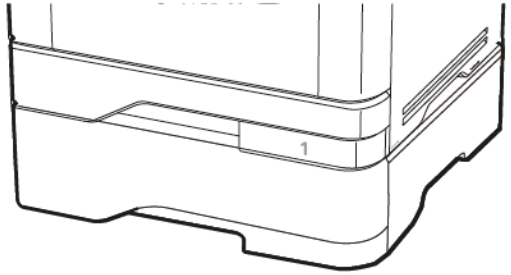

11. Remove the jammed paper.

Note: Make sure that all paper fragments are removed.

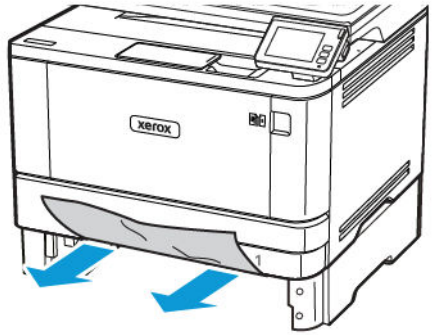

12. Insert the tray.

Paper Jam in the Duplex Unit

1. Open the front door.

> **Warning—Potential Damage:** To prevent damage from electrostatic discharge, touch any exposed metal frame of the printer before accessing or touching interior areas of the printer.

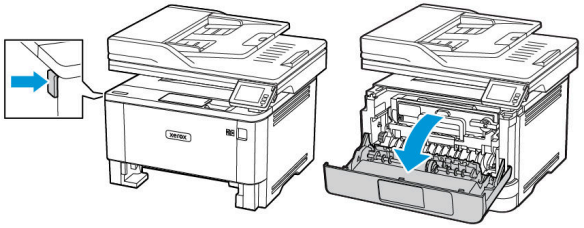

2. Remove the imaging unit.

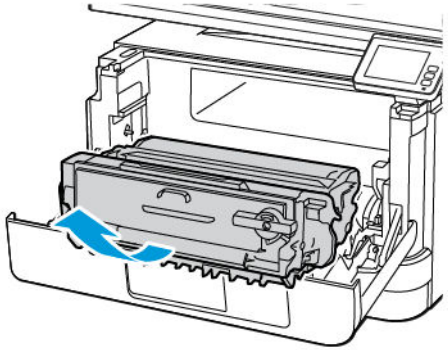

> **Warning—Potential Damage:** Do not expose the imaging unit to direct light for more than 10 minutes. Extended exposure to light may cause print quality problems.

> **Warning—Potential Damage:** Do not touch the photoconductor drum. Doing so may affect the quality of future print jobs.

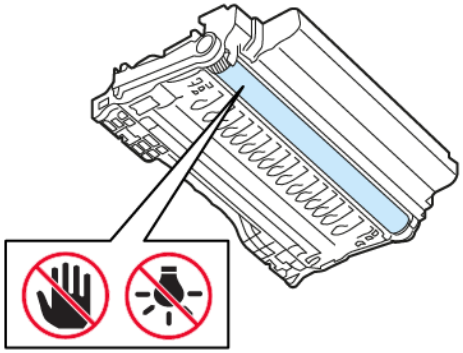

3. Remove the jammed paper.

> **CAUTION—HOT SURFACE:** The inside of the printer might be hot. To reduce the risk of injury from a hot component, allow the surface to cool before touching it.

Note: Make sure that all paper fragments are removed.

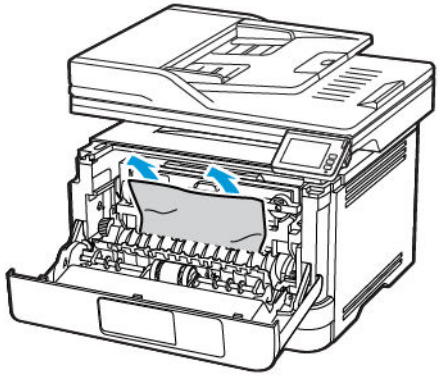

4. Insert the imaging unit.

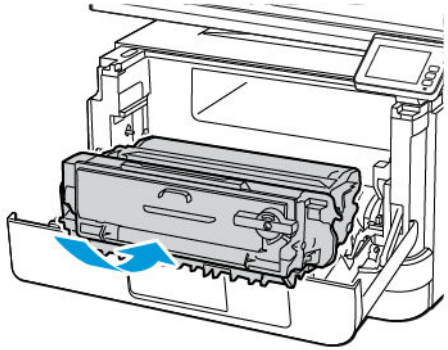

5. Close the door.

6. Remove the tray.

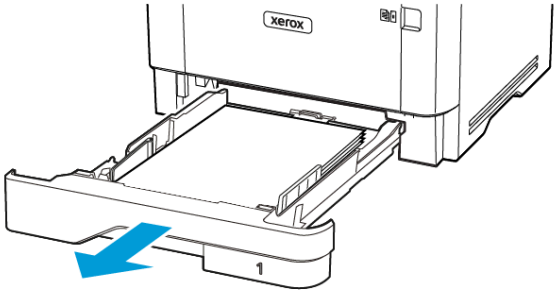

7. Push the duplex unit latch to open the duplex unit.

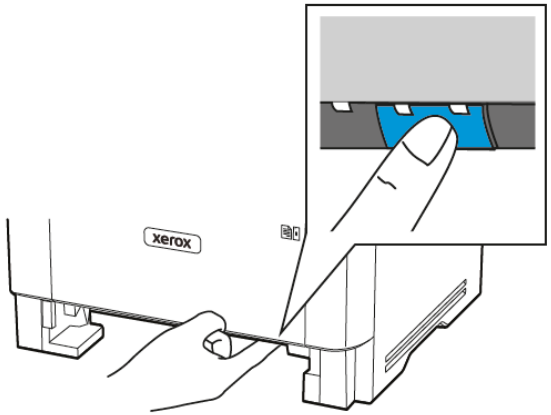

8. Remove the jammed paper.

Note: Make sure that all paper fragments are removed.

9. Close the duplex unit.
10. Insert the tray.

Paper Jam in the Rear Door

1. Open the front door.

Warning—Potential Damage: To prevent damage from electrostatic discharge, touch any exposed metal frame of the printer before accessing or touching interior areas of the printer.

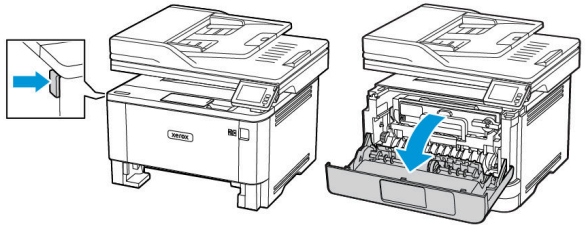

2. Remove the imaging unit.

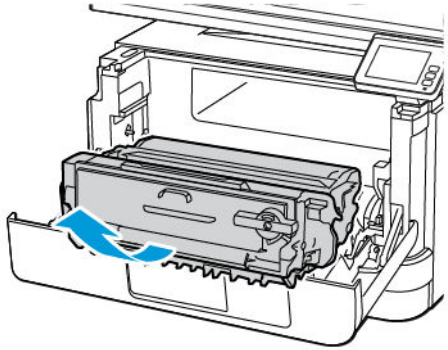

Warning—Potential Damage: Do not expose the imaging unit to direct light for more than 10 minutes. Extended exposure to light may cause print quality problems.

Warning—Potential Damage: Do not touch the photoconductor drum. Doing so may affect the quality of future print jobs.

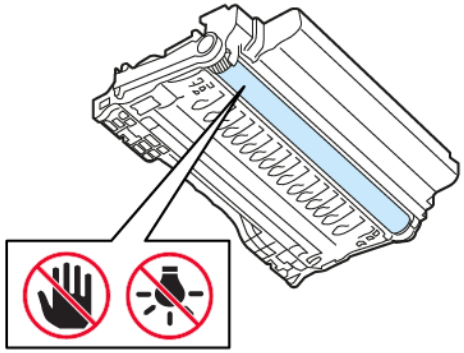

3. Open the rear door.

> **CAUTION—HOT SURFACE:** The inside of the printer might be hot. To reduce the risk of injury from a hot component, allow the surface to cool before touching it.

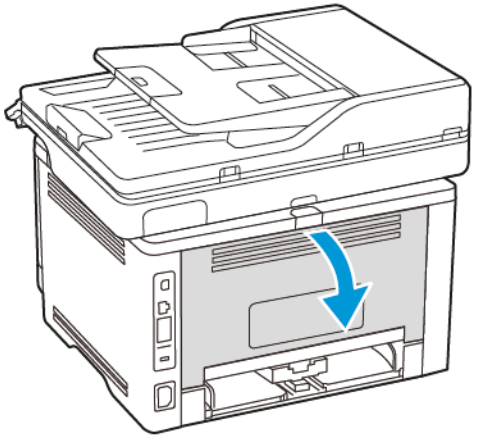

4. Remove the jammed paper.

> **Note:** Make sure that all paper fragments are removed.

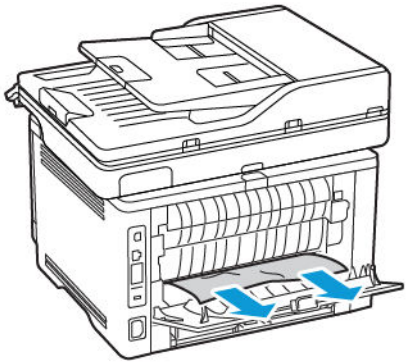

5. Close the rear door.

6. Insert the imaging unit.

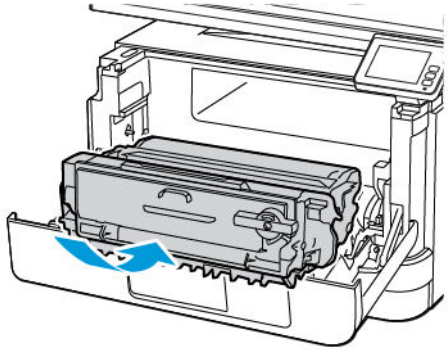

7. Close the front door.

© 2021 Xerox Corporation. All rights reserved. Xerox® is a trademark of Xerox Corporation in the United States and other countries.

Apple®, iPad®, iPhone®, iPod®, iPod touch®, AirPrint® and the AirPrint Logo® are trademarks or registered trademarks of Apple Inc. in the U.S. and other countries. Google Cloud Print™ web printing service, Gmail™ webmail service, and Android™ mobile technology platform are trademarks of Google, Inc. Microsoft®, Windows Vista®, Windows®, Windows Server®, and OneDrive® are registered trademarks of Microsoft Corporation in the United States and other countries. Mopria is a trademark of the Mopria Alliance. Wi-Fi CERTIFIED Wi-Fi Direct® is a trademark of the Wi-Fi Alliance. All other trademarks are the property of their respective owners. 702P08653

BR32935

607E39630