tapo

MagSlim LiDAR Navigation Robot Vacuum & Mop + Smart Auto-Empty Dock

70 Days without Emptying
Auto-Empty with 4L Large Dust Bag†

- Precision Mapping and Customizable Cleaning
- 78-mm / 3.1-in Ultra-Slim Design
- Vacuum and Mop Combo
- 2700Pa Powerful Suction

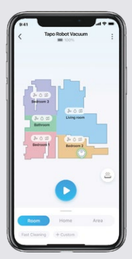

App Control

tp-link

works with Google Home

works with amazon alexa

Tapo RV20 Mop Plus

Overview

Robot Vacuum

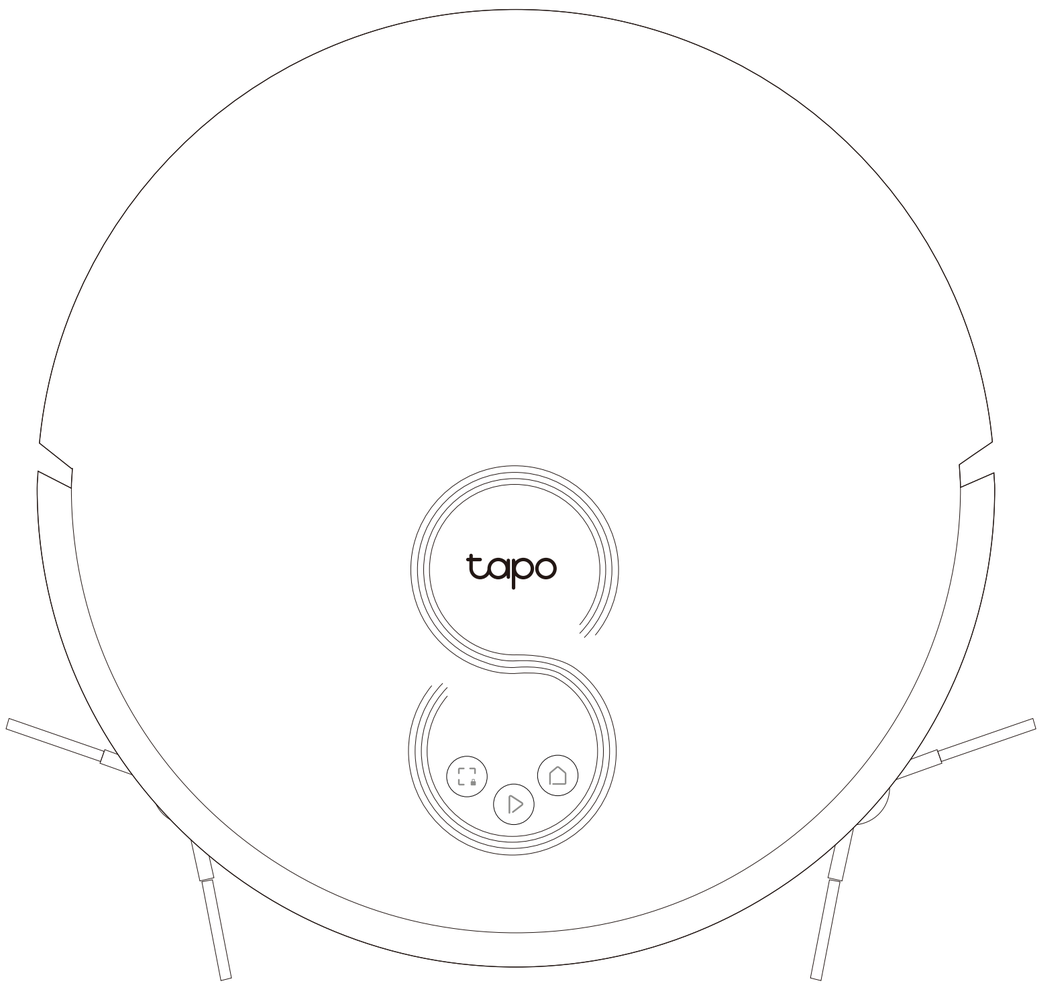

Power/Clean

- Press once: Start/pause cleaning.
- Press and hold for 3 seconds: Turn on/off the robot vacuum.

*For the first use, slide the power switch from OFF to ON to turn on.

Dock

- Return to the dock to charge.
- Empty the bin when docked.

Spot Cleaning/Child Lock

- Press once: Start spot cleaning.
- Press and hold for 5 seconds: Turn on/off the child lock.

+ Combination Button

- Press and hold simultaneously for 5 seconds:
  Enter setup mode to configure network.
- Press and hold simultaneously for 10 seconds:
  Restore to factory default settings.

LED

- **Red:** Battery level < 20%; Error
- **Orange:** Battery level between 20% and 80%
- **Green:** Battery level > 80%

Overview

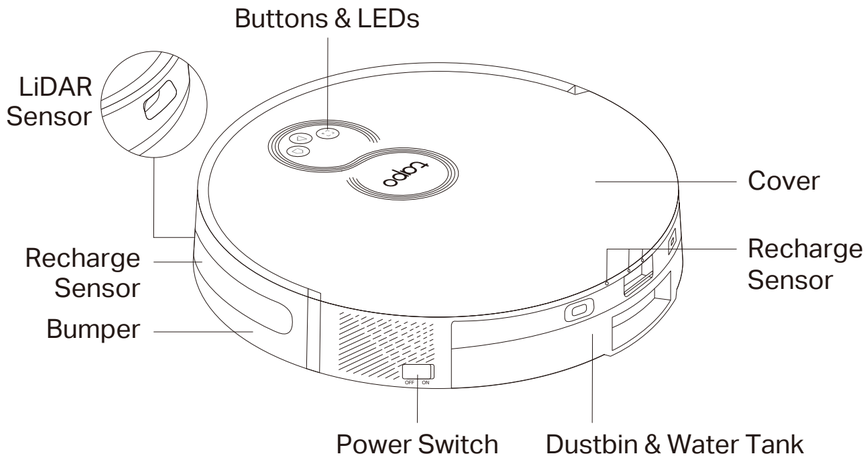

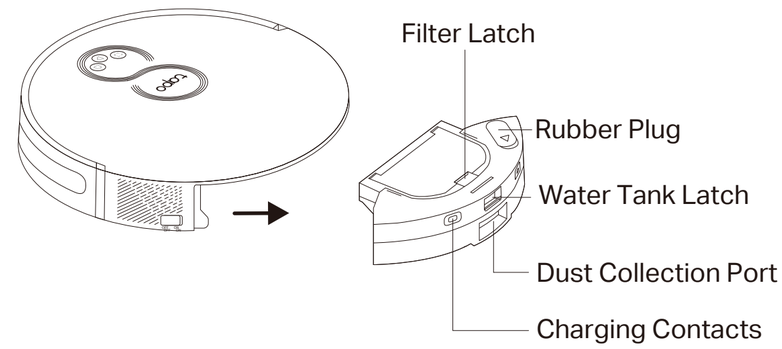

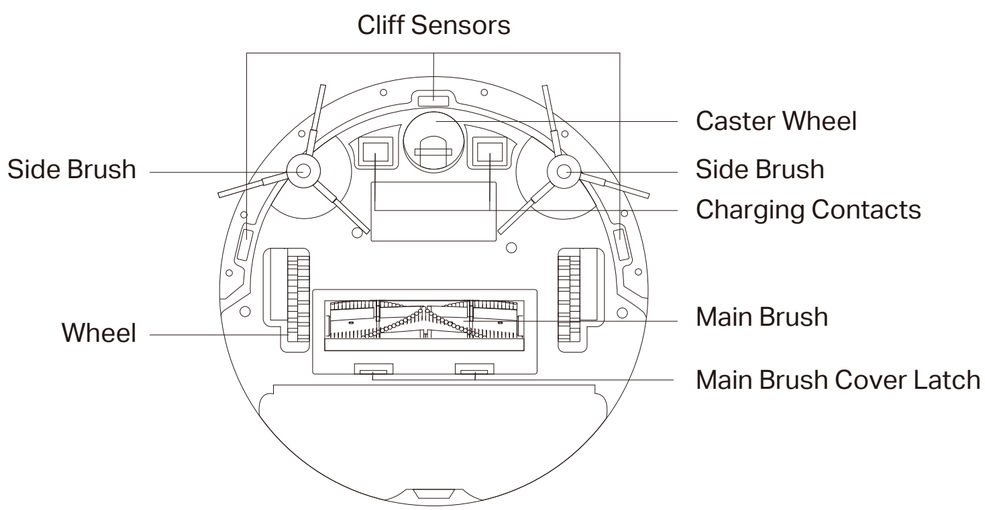

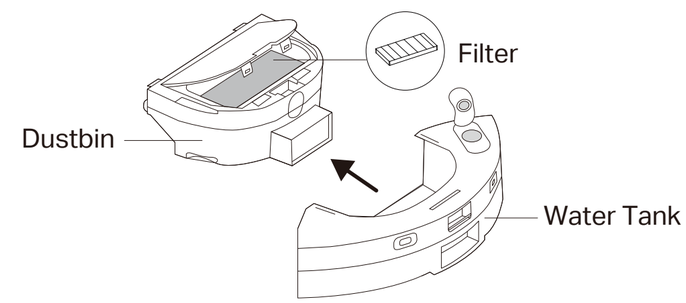

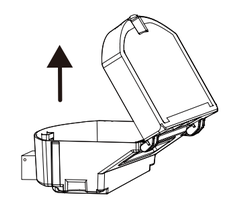

Open Dustbin

Overview

Auto-Empty Dock

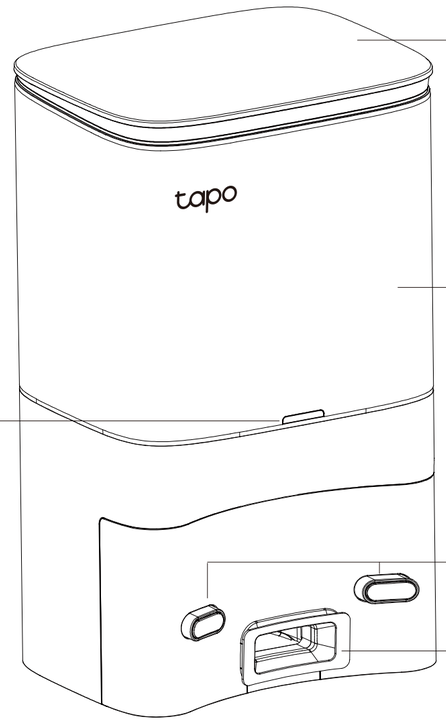

Top cover
Open to install/take out the dust bag.
Replace the cover each time you open it.

Dust Bag Compartment

Charging Contacts

Dust Collection Port
The debris in the robot vacuum will be collected into the dust bag through the port.

LED Indicator

- **White:** Working properly
- **Off:** Robot vacuum is connected to the dock; sleeping.
- **Solid Red:** Dust bag not installed; top cover not closed.
- **Flashing Red:** Error

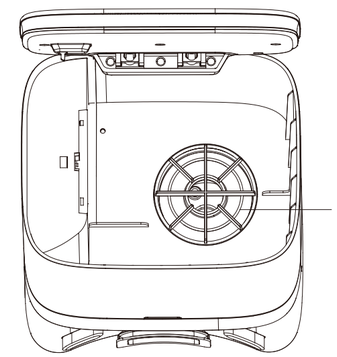

Fan Filter

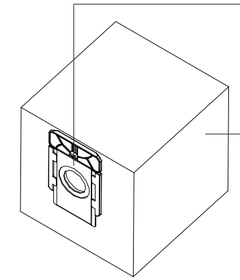

Dust Bag Handle

Dust Bag

Highlights

Up to 70 Days Hands-Free Cleaning

- No-Fuss Auto Empty

  Automatically empties its dustbin after cleaning to keep your hands free

- 4L Sealed Disposable Dust Bag

  Dust stays out of sight for up to 70 days and your hands stay clean†

- Empties without Residue

  The dock's strong 27000Pa suction power and shortened air duct help empty the dustbin within moments

- Reduces Untimely Noise Interference

  Auto-adjusts emptying duration and follows do-not-disturb schedules to avoid noisy interruptions

MagSlim LiDAR Navigation Robot Vacuum & Mop + Smart Auto-Empty Dock Tapo RV20 Mop Plus

// Highlights

MagSlim LiDAR Navigation

The Tapo RV20 Series retains the precise mapping of traditional LiDAR navigation while being extremely thin thanks to its sunk laser module.

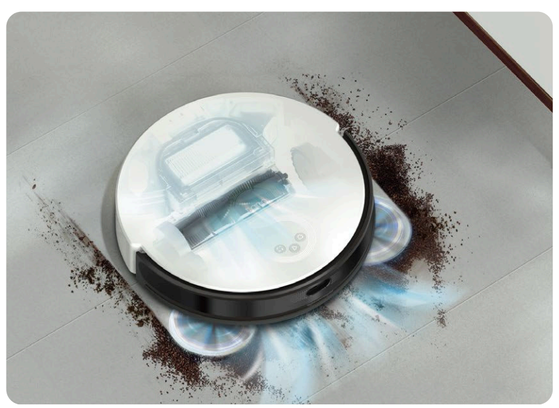

2700Pa Powerful Suction

With a maximum suction power of 2700Pa, this robot effectively removes debris and dust from carpets and hard floors. Four vacuum modes with different levels of suction power meet various cleaning needs.

Mops and Vacuums Simultaneously

Mopping is essential for houses with hard floors, which need regular polishing. RV20 Mop Plus provides a large 300ml water tank to cover up to 200 m^2 / 2100 ft^2. Vacuuming and mopping in one trip turns your thankless chore time into me time.[A]

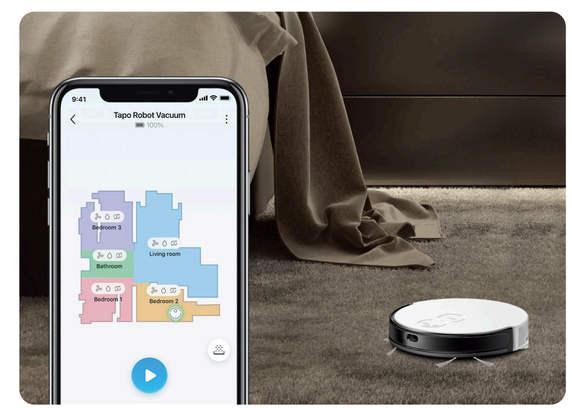

Total Control at Your Fingertips

Cleaning made simple. Manage your own cleaning schedule and monitor your robot's status at home or away on the feature-rich Tapo app.

78-mm / 3.1-in Ultra-Slim Design

RV20 Mop Plus's ultra-slim body allows it to enter more hard-to-reach and narrow spaces, increasing its cleaning coverage.

High-Precision Mapping

Maps out your house in minutes with millimeter-level detection precision, avoiding omissions and repeated cleaning.

Twin Side Brushes

Takes care of corners and edges while preventing dirt from scattering.

Auto-Boost for Your Carpets

Automatically increases the suction power when encountering carpets.

Wet Hard Surfaces, Dry Carpets

Set no-mopping areas for your carpets to prevent them from getting wet while mopping.

3-Level Electronic Mopping

Provides 3-level water flows to suit different floor types with consistent and steady water pressure.

Customizable Room Cleaning

Merge and separate areas, name individual rooms, and customize cleaning modes for each room.

Virtual Walls and No-Go Zones

Set up areas you don't want the robot to go via the Tapo app.

Specifications

Care and Maintenance

To maintain optimal performance, maintain the robot vacuum according to the following guidelines.

Part	Maintenance Frequency	Replacement Frequency*
Dustbin	Clean/wash as needed	/
Filter	Once a week	3-6 months
Main Brush	Every 2 weeks	6-12 months
Side Brush	Once a month	3-6 months
Dust Bag	/	Replaced when it is full
Mop Cloth	After each use	2-3 months
Caster Wheel	Clean as needed	/
Main Wheels	Once a month	/
Sensors	Once a month	/
Charging Contacts	Once a month	/

*Replacement frequency may vary depending on the actual situation. Parts should be replaced if visible wear appears.

// Specifications

Mapping & Navigation Features

- Mapping/Path Planning: MagSlim LiDAR + Gyroscope
- High-Precision Map: Yes
- Obstacle Avoidance: MagSlim LiDAR + Infrared
- Barrier-Cross Height: 20 mm/0.79 in
- Anti-Drop Protection : Yes

Dock Features

- Auto Dust Collection: Yes
- Suction Power of Auto-Empty Dock: 27000Pa
- Dust Bag Capacity: 4 L

Vacuuming Features

- Max Suction Power: 2700Pa
- Suction Level Adjustment: 4 levels
- Dustbin Capacity: 350 ml
- Dustbin Detection: Yes
- HEPA Filter: H11
- Carpet Boost: Yes, Electricity Recognition

Mopping Features

- Wet Mopping : Yes
- Mopping Type: Electric Water Flow Control
- Water Level Adjustment: 3 levels
- Water Tank Capacity: 300ml

Battery

- Battery Capacity : 2600 mAh
- Vacuum Max Battery Life: 180 min per charge (Quiet Mode)
- Recharge & Resume: Yes

App Features

- Real-Time Tracking: Yes
- Multi-Floor Mapping: Yes
- Scheduled Cleaning: Yes
- Virtual Walls: Yes
- No-Go Zones: Yes
- Zone Cleaning: Yes

Specifications

Physical

- Product Dimensions:

  Robot Vacuum: 342.6 × 342.2 × 78 mm (13.5 × 13.5 × 3.1 in)

  Auto-Empty Dock: 227 × 191.4 × 381.3 mm (8.9 × 7.5 × 15 in)
- Package Contents:

  Robot Vacuum Cleaner ×1

  Auto-Empty Dock ×1

  Mop Cloth Mount ×1

  Washable Mop Cloth ×2

  4L Disposable Dust Bag ×2

  Side Brush ×4

  HEPA Filter ×2

  Cleaning Brush ×1

  User Manual

Others

- Wireless Connection:

  IEEE 802.11 b/g/n, 2.4 GHz band only;

  Bluetooth 4.2 (only for onboarding)
- Rated Input Voltage: 120 VAC, 60Hz (JP/US version), or 220-240 VAC, 50Hz
- Max Charging Power Consumption: 18 W (DC24 V 750 mA)
- Max Working Power Consumption:

  Robot Vacuum: 30 W

  Auto-Empty Dock: 950 W
- Works with Google Home: Yes
- Works with Amazon Alexa: Yes

†Based on internal testing. Actual emptying intervals are subject to change due to usage and environmental factors.
^Based on internal testing carried out by the manufacturer, using low water flow with a full battery. Actual results may vary according to the home environment. It is recommended to mop with Tapo Robot Vacuum Foamless Hard-Surface Floor Cleaner.
Specifications are subject to change without notice. All brands and product names are trademarks or registered trademarks of their respective holders.
@2023 TP-Link