DS45-600BL2

SPECIFICATIONS

GENERAL

Min. screen size*	10 inch
Max. screen size*	32 inch
Max. weight	6 kg (per screen)
Screens	1
VESA minimum	75X75 mm
VESA maximum	100x100 mm
Desk mount	Stand
Distance to wall	12,7 cm

FUNCTIONALITY

Height adjustment	14-40 cm
Width adjustment	39,7 cm
Depth adjustment	12,7-29,7 cm
Lockable	Not lockable
Tilt (degrees)	90°
Swivel (degrees)	180°
Rotate (degrees)	360°
Height	44,7 cm
Width	90,8 cm
Depth	29,7 cm
Adjustment type	Manual

INFORMATION

Color	Black
Main material	Steel
Warranty	5 year
EAN code	8721246340478

*Please note: The inch sizes stated are just an indication, combined with the weight and VESA sizes. The maximum weight and VESA size are absolute restrictions for the products and should not be exceeded.

NEOMOUNTS DS45-600BL2 DUAL MONITOR

Neomounts DS45-600BL2 Dual monitor stand - 10-32" - 0-6 kg | 13,2 lbs (2x) - 90° tiltable - 360° rotatable - 180° swivel - VESA 75x75 - 180° lock - Black

The Neomounts DS45-600BL2 is the perfect choice for those looking for a sturdy and versatile solution for two monitors up to 32" with a weight capacity of 6 kg per screen. This full motion monitor stand offers maximum flexibility thanks to its versatile tilt (90°), rotate (360°), and swivel (180°) technology, enabling you to always find the optimal viewing angle for an ergonomic working posture.

The DS45-600BL2 is designed for a personalized and efficient workspace. The strong construction guarantees optimal stability and sturdiness on any desk. The practical cable management system ensures neat routing of cables, while the 180° lock mechanism prevents the screens from swinging back too far, protecting your wall or separation panel from damage. In addition, the base of this stand provides a convenient slot to place a phone, for an organized and clutter-free desk.

The stand is suitable for screens that meet VESA pattern 75x75 or 100x100 mm. The Easy-release VESA system makes it easy to attach or detach the screens. Installation of the DS45-600BL2 is quick and easy, making this monitor stand a durable addition to any professional or home office.

Neomounts®

DS45-600BL2 **NEOMOUNTS DS45-600BL2 DUAL MONITOR**

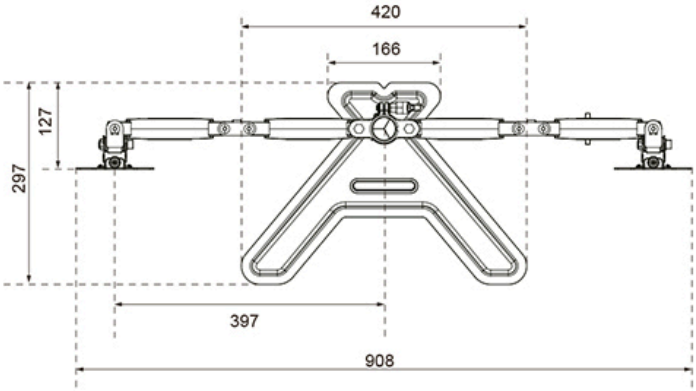

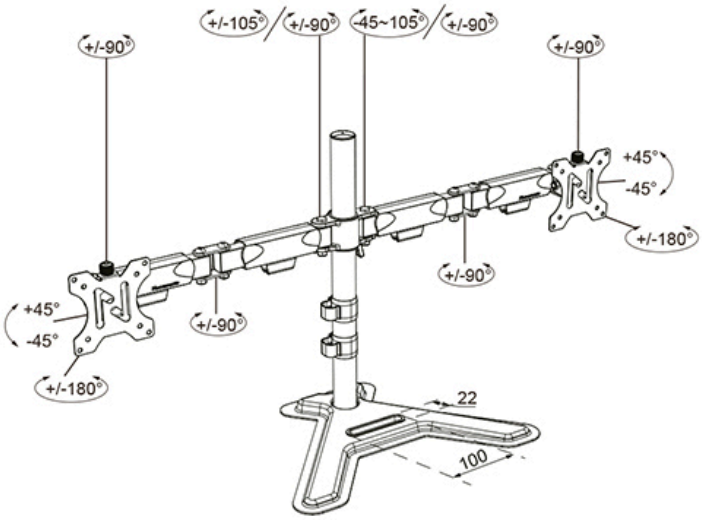

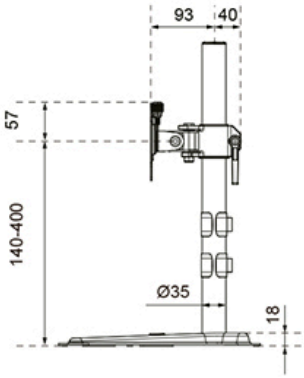

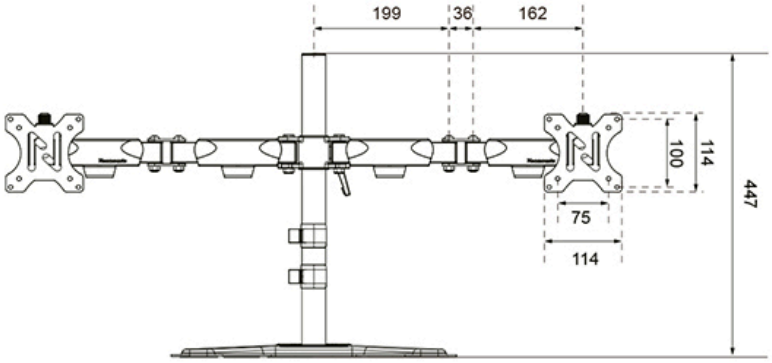

Neomounts

Measuring unit: mm